SANYO

Service Manual

Twin CD Players and Dual Cassette Recorder with AM/FM Stereo Radio

M CD950F (EUROPE) (ITALY)

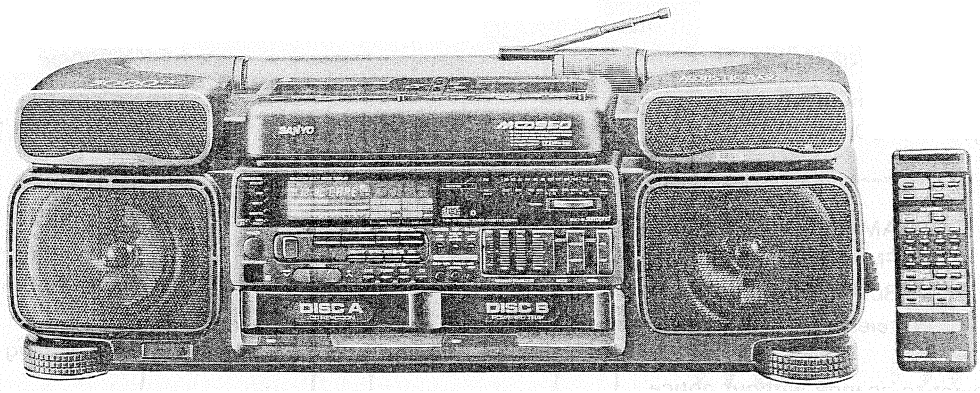

Contents

SPECIFICATIONS 1
LASER BEAM SAFETY PRECAUTIONS 1
LASER BEAM INFORMATION 2
LASER BEAM DESCRIPTION AND HANDLING OF MAIN PARTS 4
REMOVAL AND INSTALLATION 5
NOTES REGARDING ASSEMBLY OF EBSS SPEAKER ENCLOSURES 8
DIAL CORD INSTALLATION 9
TUNER ADJUSTMENTS 9
AMPLIFIER ADJUSTMENTS 11
TAPE DECK ADJUSTMENTS 12
TAPE DECK MECHANISM DESCRIPTION 14
COMPACT-DISC PLAYER DSCRIPTION 16
COMPACT-DISC PLAYER ADJUSTMENTS 18
COMPACT-DISC PLAYER AND CASSETTE DECK CONTROL CIRCUITRY 30
TAPE DECK SERVICE MODE 34
TAPE DECK DESCRIPTION 36
DISCRIPTION OF THE COMPACT DISC PLAYER SERVICE MODE 40
EXPLODED VIEW (CABINET & CHASSIS) 43
PARTS LIST 46
PARTS LIST & EXPLODED VIEW (REMOTE CONTROL) 53
EXPLODED VIEW (CD MECHANISM) 54
PARTS LIST (CD MECHANISM) 55
EXPLODED VIEW (TAPE MECHANISM " A ") 56
PARTS LIST (TAPE MECHANISM " A ") 57
EXPLODED VIEW (TAPE MECHANISM " B ") 58
PARTS LIST (TAPE MECHANISM " B ") 59
BLOCK DIAGRAM 60
CONNECTION 64
SCHEMATIC DIAGRAM (TUNER) ... 66
WIRING DIAGRAM (TUNER) 67
SCHEMATIC DIAGRAM (AMP.①) .. 68
WIRING DIAGRAM (AMP. ①) 70
SCHEMATIC DIAGRAM (TAPE MECHANISM CONTROL) 72
WIRING DIAGRAM (TAPE MECHANISM CONTROL) 74
WIRING DIAGRAM (CD ①) 76
WIRING DIAGRAM (CD ②) 78
SCHEMATIC DIAGRAM (AMP.②) .. 80
WIRING DIAGRAM (AMP. ②) 81
SCHEMATIC & WIRING DIAGRAM (REMOTE CONTROL) 83
IC BLOCK DIAGRAM 84
SCHEMATIC DIAGRAM (CD) ..... INSERTION

PRODUCT CODE No.
142 831 06 (EUROPE)
142 831 08 (ITALY)

REFERENCE No. WM-580290

SPECIFICATIONS

CASSETTE SECTION

Recording system	AC bias, 4 track
Erasing system	AC erase
Tape speed	4.8 cm/sec.
Fast wind time	110 sec. (C-60 tape) (TAPE A/TAPE B)
Frequency response	40 - 14,000 Hz (Normal tape) 40 - 14,000 Hz (CrO_2 tape) 40 - 16,000 Hz (Metal tape, playback only)

CD SECTION

Channels	2 channels
Frequency response	20 - 20,000 Hz (+1/-3 dB)
S/N ratio	90dB (1kHz)
Channel separation	80dB (1kHz)
Wow & Flutter	Undetectable
Sampling frequency	44.1 kHz
Quantization	16 bits linear/ch
Pick up light source	Semi-conductor laser
Pick up wave length	790nm

RADIO SECTION

Tuning ranges	AM: 526.5 — 1,606.5 kHz FM: 87.5 — 108MHz
Antennas	Built-in ferrite bar and telescopic rod antenna

GENERAL

Loudspeakers	12cm × 2, 5 ohms 10cm × 1, 6 ohms Passive radiator × 1
Output Power	66W (P.M.P.O.), 45W (music power)
Terminals	
EXT MIC:	2.8 mV/1 kohms
PHONES:	32 ohms
LINE IN:	190 mV/47 kohms
LINE OUT:	500 mV/47 kohms
SURROUND SPKR.:	8 ohms
Power source	AC: 120/220V, 50/60 Hz (EUROPE) AC: 220V, 50Hz (ITALY)
CLOCK BATTERY:	DC 4.5V, 3 " AA " or " R6 " size batteries (optional)
Power consumption	126W
Dimensions	725 ×230 ×255 mm (W ×H × D)
Weight (approx.)	10 kg excluding batteries.

REMOTE CONTROL

Power source:	DC 3V, 2 " AA " or " R6 " size batteries (optional)
Dimensions	64 ×175 ×18 mm (W ×H × D)
Weight (approx.)	126 kg including batteries.

Specifications subject to change without notice.

LASER BEAM SAFETY PRECAUTIONS

Pick-up that emits a laser beam is used in this compact disc player.

CAUTION— USE OF CONTROLS OR ADJUSTMENTS OR PERFORMANCE OF PROCEDURES OTHER THAN THOSE SPECIFIED HEREIN MAY RESULT IN HAZARDOUS RADIATION EXPOSURE

LASER OUTPUT ..... 1.0mW Max. (CW)

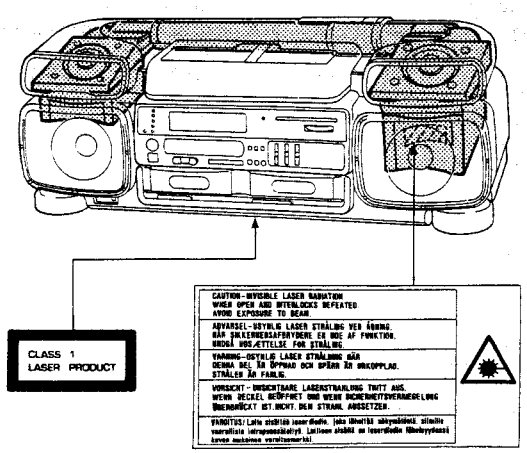

LASER BEAM INFORMATION

a. CONDITIONS FOR LASER BEAM EMISSION FROM THE PICK-UP

The conditions for laser beam emission from the pick-up are the satisfaction of all three of the follwing points.

(a) The disc tray must be fully closed (and a disc must be loaded).

(b) The unit's power must be ON, and the " CD " function must be selected.

(c) The PLAY/PAUSE button must be pressed, or a numeric button (0 — 9 or 0 — 9 and +10) must be pressed, or the CD→TAPE button must be pressed.
Note, however, that the above is applicable to the CD→TAPE button when a cassette is loaded to tape deck B; furthermore, the requirement that the " CD " function must be selected is not applicable if the PLAY/PAUSE button is pressed.

(1) Laser beams are emitted from the pick-up when conditions (a) - (c) are satisfied.

(2) The pick-up is moved to the innermost groove.

(3) The servos are activated.

(4) The servos are not activated if a disc is not loaded.

(5) If the TOC (Table of Contents) is not read, the FL displays " **no disc** ", and the laser beam emission stops.

(6) Laser beams will not there after be emitted unless and until conditions (a) - (c) are all once again satisfied.

(7) If the TOC (Table of Contents) is read, the display will show the total number of tracks and the total time, and there will be no emission of the laser beam.

(8) When the PLAY/PAUSE button is then pressed, laser beams will be emitted until there is a change to the STOP mode.

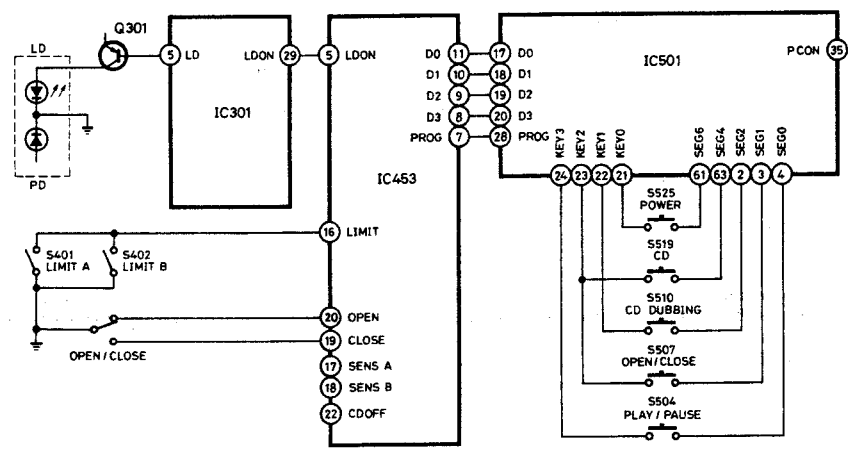

b. IC501 : MICROCOMPUTER IC

PLAY/PAUSE (Pin 24, Pin 4)	: PLAY/PAUSE key input
CD→TAPE (Pin 22, Pin 2)	: CD→TAPE key input
OPEN/CLOSE (Pin 23, Pin 3)	: OPEN/CLOSE
CD (Pin 23, Pin 63)	: CD Key input
POWER (Pin 21, Pin 61)	: POWER Key input
P—CON (Pin 35)	: POWER CONTROL output signal
DATA 0 (Pin 17)	: Data bus
DATA 1 (Pin 18)	: Data
DATA 2 (Pin 19)	: Data bus
DATA 3 (Pin 20)	: Data
PROG (Pin 28)	: CLOCK PULSE output (μPD82C43)

.ASER BEAM INFORMATION

:. IC453 : IC for I/O EXPANSION PORTS

D0 (Pin 11)	: Data bus (μPD75216ACW)
D1 (Pin 10)	: Data
D2 (Pin 9)	: Data
D3 (Pin 8)	: Data
PROG (Pin 7)	: CLOCK PULSE input
SENS B (Pin 17)	: DISC B Photo sensor input
SENS A (Pin 18)	: DISC A Photo sensor input
CLS (Pin 19)	: Closed tray discrimination switch input (completely closed = LOW)
OPEN (Pin 20)	: Opened tray discrimination switch input (completely opened = HIGH)
CD OFF (Pin 22)	: Compact-disc player section power control signal output ($\overline{\text{ON}}$ /OFF)
LIMIT (Pin 16)	: Pick-up position-detection switch (ON/OFF)

I. TIMING CHART

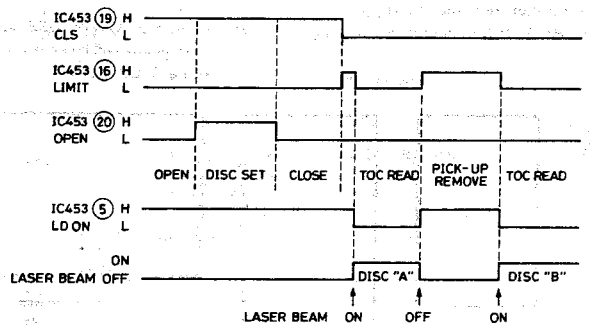

ı. OPERATION

(1) It will be assumed here that a compact disc has not been loaded.
(2) Press the POWER key (to switch ON the power), and press the CD key.
(3) Press the OPEN/CLOSE key to open the disc tray. The OPEN switch will be switched OFF at this time.
(4) Load compact discs (A and B).
(5) Press the OPEN/CLOSE key.
The disc tray will close.
The OPEN switch will be switched ON at this time.
(6) When the disc tray has completely closed, the pick-up will function so that the limit switch will be switched ON → OFF → ON.
After the pick-up operation is finished, LD ON (pin no. 5) of IC453 will change from HIGH level to LOW level, and LOW-level signals will be input to $\overline{\text{LDON}}$ (pin no. 29) of IC301.
When LOW-level signals are input to $\overline{\text{LDON}}$, transistor Q301 is switched ON by the output from LD (pin no. 5) of IC301, and the laser beam is emitted.
(7) The disc will rotate and the TOC (Table of Contents) of disc B will be displayed.
Then, when the disc's rotation stops, LD ON changes from LOW level to HIGH level, Q301 is switched OFF, and the laser beam emission stops.
(8) The pick-up then moves to the disc B side.
When the movement to disc B is finished, LD ON (Pin no. 5) of IC453 will change from HIGH level to LOW level, and LOW-level signals will be input to $\overline{\text{LDON}}$ (pin no. 29) of IC301.
When LOW-level signals are input to $\overline{\text{LDON}}$, transistor Q301 is switched ON by the output from LD (pin no. 5) of IC301, and the laser beam is emitted.
(9) The disc will rotate and the TOC (Table of Contents) of disc A will be displayed. The display will then show the total number of tracks and the total time for that disc.
Then, when the disc's rotation stops, LD ON changes from LOW level to HIGH level, HIGH-level signals are input to $\overline{\text{LDON}}$, Q301 is switched OFF by the output from LD, and the laser beam emission stops.
(10) When the PLAY/PAUSE button is pressed, LD ON once again changes from HIGH level to LOW level, and the laser beam is emitted.

LASER BEAM DESCRIPTION AND HANDLING OF MAIN PARTS

PICK-UP HANDLING, REPLACEMENT AND SERVICE NOTES

● Preparations
The compact-disc player incorporates a great many ICs and LSIs, as well as the pick-up (laser diode).
Because these components are extremely sensitive to static electricity and therefore can be damaged by a high-voltage concentration of static electricity, the greatest care is necessary for their handing. In addition, many high-precision components, such as the lens, are used in the pick-up.

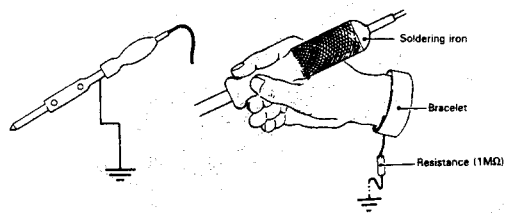

(1) The compact-disc player and its components must never be repaired or stored in places where the temperature or humidity is high, in places where there is a strong magnetic field, or where there is excessive dust.
(2) Before making any replacement of a component, first disconnect the power cord's plug from the electrical outlet.
(3) All equipment, measuring instruments and other tools must be grounded.
(4) The workbench must be covered by a conductive sheet and grounded.
(5) In order to prevent AC leakage from a soldering iron, metallic tools must be grounded.
(6) Workers must be grounded.
(7) The laser beam from the pick-up must never be permitted to enter the eyes directly, and should not be allowed to contact the skin.

(a) Unpacking
In order to prevent damage by static electricity during shipment, the pick-up is packed in a special conductive bag. The pick-up should be left in this bag until immediately prior to use.

(b) Magnetic fields
A powerful magnet is used in the pick-up. Take care not to bring magnetic materials nearby.
(c) Places that must not be touched
● Pick-up lens
● Pick-up screws
● Printed-circuit board pattern

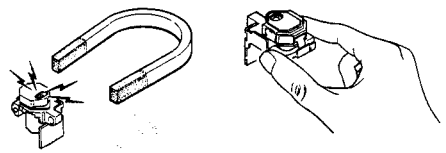

Your eyes can be injured if the laser beam is allowed to enter them.
Take the greatest care to absolutely avoid eye contact with the laser beam I
Never switch ON the power to a pick-up if its laser output port (object lens, etc.) is damaged.
Never look directly at the laser beam, and do not allow the beam to contact your skin.

Cleaning the lens surface

If dust gets on the lens surface
Use an air brush (such as used for cleaning a camera lens) to blow away the dust.
The lens is held by a support spring.
If the lens surface becomes dirty, use a soft cotton swab or similar tool dampened with isopropyl alcohol to clean it, taking care not to apply excessive force and damage the leno's support spring.

Storage in conductive bag

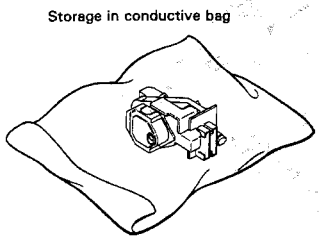

Avoid impact shocks.

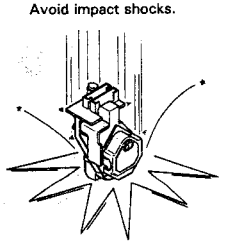

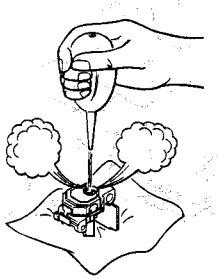

Never attempt to disassemble the lens.

a. CABINET

- Disconnect the power cord plug from the electrical outled.

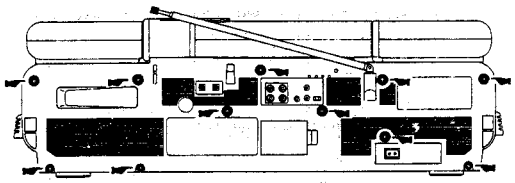

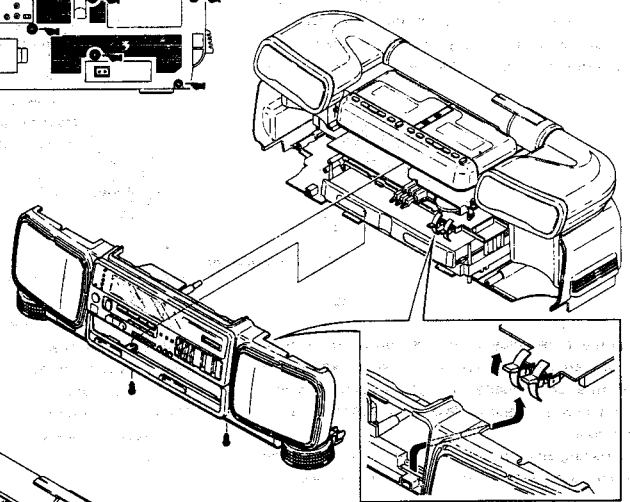

b. TAPE MECHANISM BLOCK

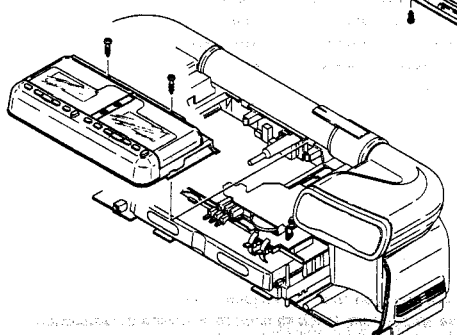

TAPE MECHANISM CONTROL P.C.BOARD

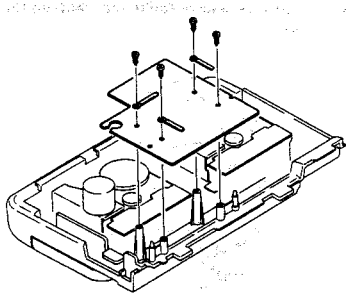

TAPE MECHANISM

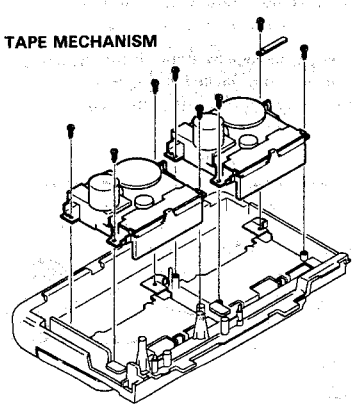

c. CD BLOCK

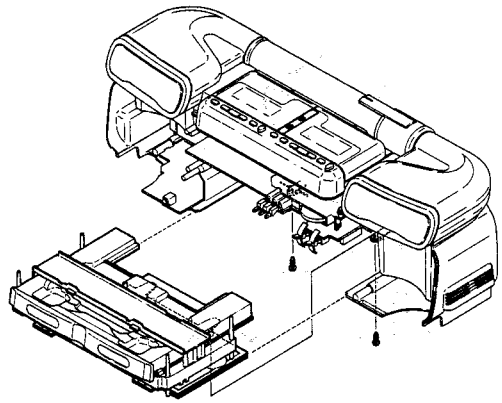

CD MECHANISM BLOCK

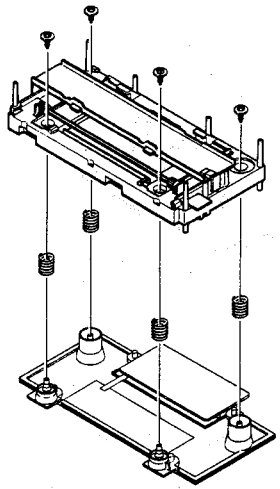

CD MECHANISM, DISC TRAY

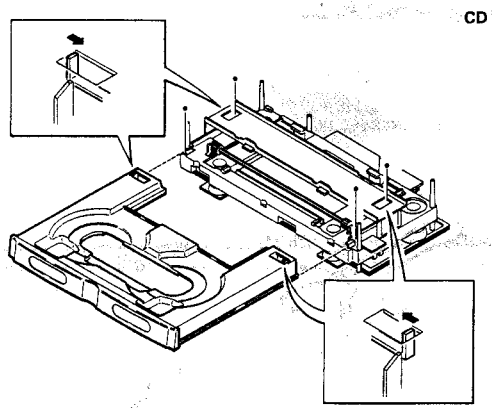

CD MECHANISM P.C. BOARD

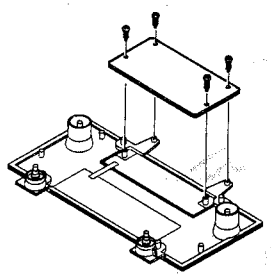

- Take care, during disassembly, not to lose the four steel balls (563)
  During assembly, moreover, be sure to apply a coating of MOLYKOTE (EM50L)

d. AMP. & TUNER P.C. BOARD

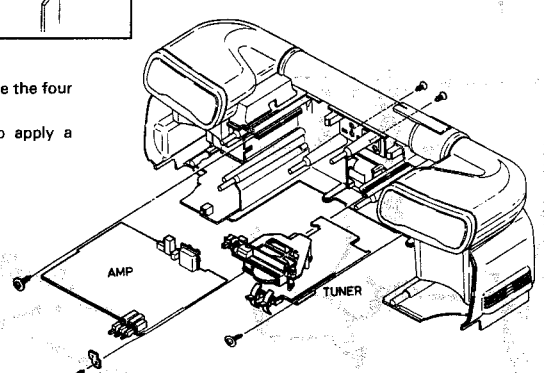

TUNER P.C. BOARD

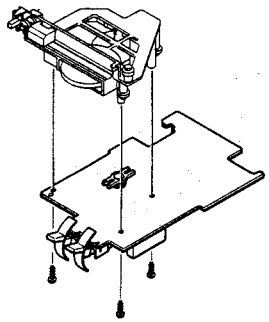

e. EBSS LEVEL CONTROL SWITCH & ROTARY KNOB

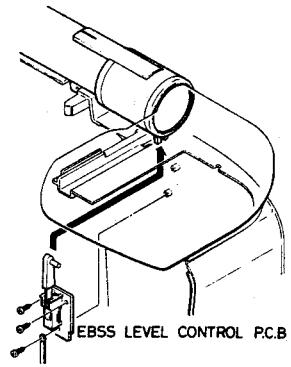

. WIRING LAYOUT

- All wiring should be returned to the original posinal position after work is completed.
- Arrange the lead wires so that they are not near the heat sink of the power-supply board.

a) BACK LID

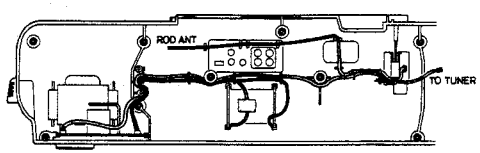

b) ANTENNA LEAD

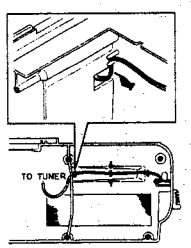

(c) TUNER P.C.BOARD

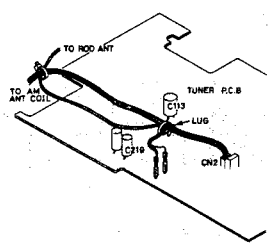

d) TAPE MECHANISM

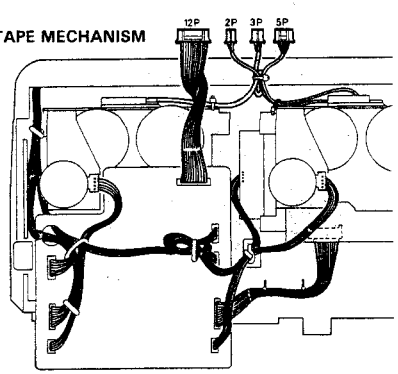

(e) CD MAIN P.C.BOARD

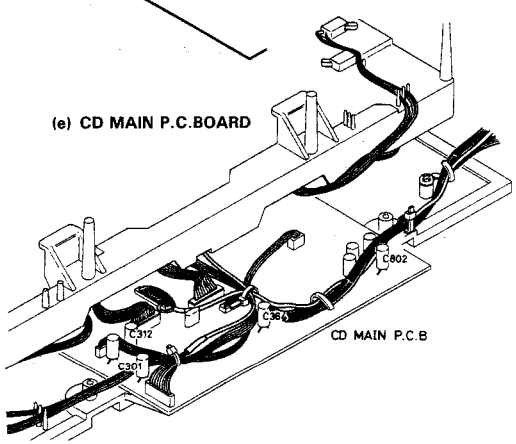

(f) CABINET

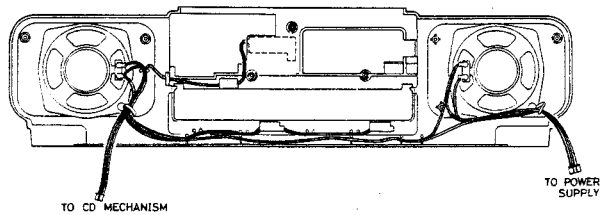

(h) AMP. P.C.BOARD

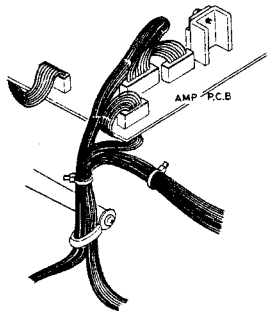

(g) DISPLAY P.C.BOARD

- If, in the tone block, lead wiring is too close to switches, etc., they can be adversely affected, so arrange the wiring as shown in the illustration.

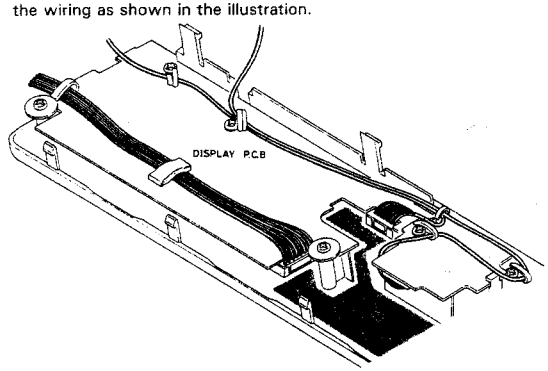

(i) CD MECHANISM

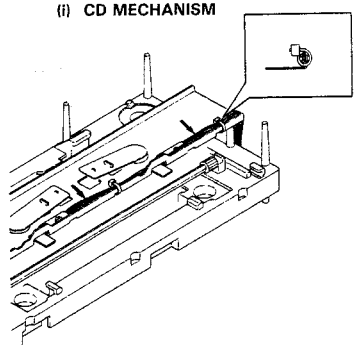

NOTES REGARDING ASSEMBLY OF THE EBSS SPEAKER ENCLOSURES

The EBSS component of the 3D (three-dimensional) system has a configuration in which the enclosure for the woofer and the enclosure for the passive radiator, and the horn section that couples these enclosures, are one unified component from the atmospheric aspect, and, because drive is activated by a high level of energy, a certain degree of care is necessary when these components are assembled, as described below.

a. The screws that hold the speakers must be completely tightened at a uniform degree of torque.
b. It is important to check to be sure that the horn component is securely coupled.
   Check to be sure that the wiring outlet is securely sealed.
c. Assemble both enclosures and the horn component and perform the wiring as shown in the illustration hereafter, and then, after confirming that there is no abnormal sound, install the assembled components to the main unit.

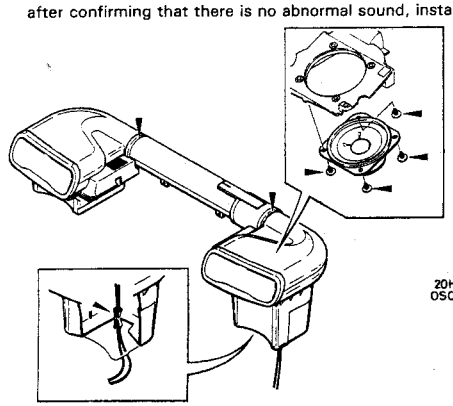

- Input oscillation frequencies (20Hz — 1kHz) through an amplifier (15W or more), and then gently vary the frequency under conditions in which the output voltage is 9.8V (150 Hz) in order to check to be sure there is no abnormal sound.

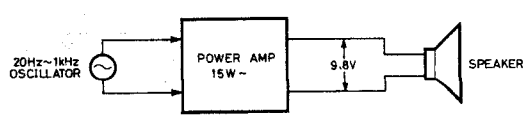

AL CORD INSTALLATION

● **PREPARATIONS**

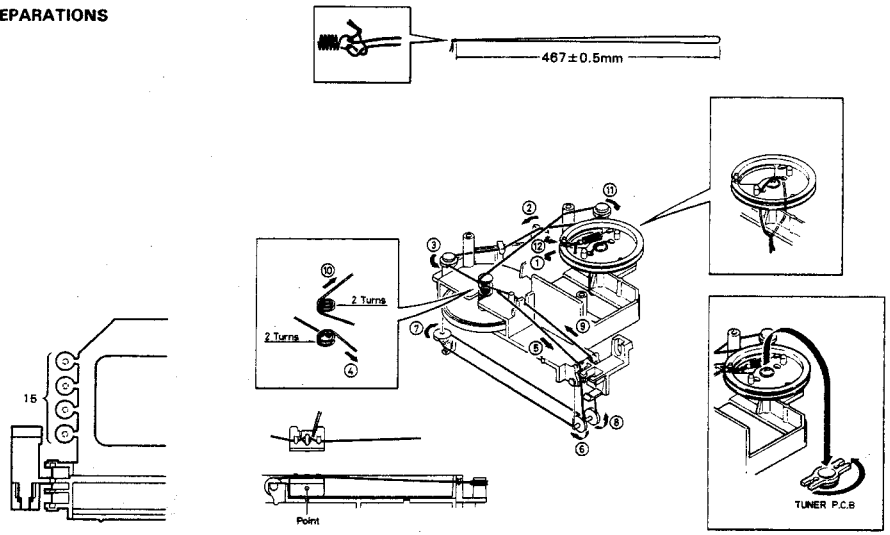

- The pulley (16) for the dial cord is not included with the chassis (14) available for supply. The set pin for the pulley is moduled where shown in the figure.

JNER ADJUSTMENTS

- Use a plastic screwdriver for adjustment.
- Adjust the intermediate frequency of FM and AM to the frequency of ceramic filter.
- Make adjustments without removing the tuner printed-circuit board from the cabinet.

Supply voltage	: AC 120/220V, 50/60Hz (EUROPE) 220V, 50Hz (ITALY)	Function selector	: TUNER
		Graphic equalizer control	: 100 Hz 0 (Center) 1 kHz 0 (Center) 10 kHz 0 MAIN
Speaker impedance	: 5 Ω	Surround switch	: OFF
Standard Ouptput	: 50mW (500 mW)		

PARTS LOCATION

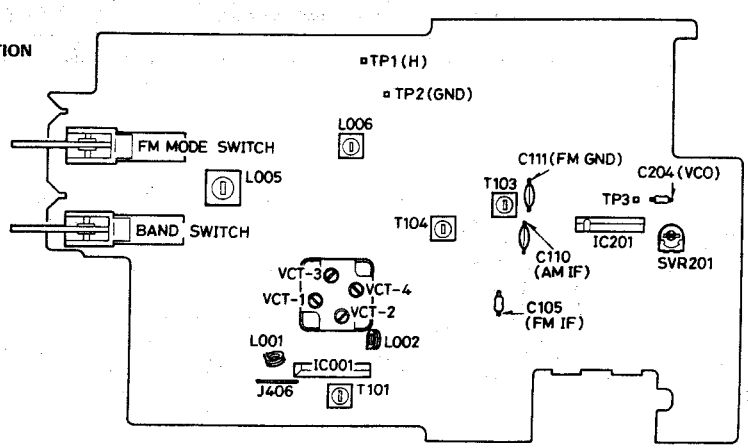

TUNER ADJUSTMENTS

(a) Adjustment of AM BAND
BAND SELECT SWITCH : AM

Step	Adjusting Circuit	Connections Input	Connections Output	SG Frequency	Position of tuning dial	Adjustment	VTVM Oscilloscope
1	IF	Closed the output terminal by sweep generator, it place to L005	Connect sweep generator to C110 (H), C111(GND)	460kHz	Low	T104	MAX.
2	Tuning Coverage	Connect AM SG to Test Loop	Connect VTVM to speaker terminals	517kHz	Low End	L006	MAX.
3				1640kHz	High End	VCT-4	
4	Tracking	Connect AM SG to Test Loop	Connect VTVM to speaker terminals	600kHz	600kHz	L005	MAX.
5				1400kHz	1400kHz	VCT-3	
6	Repeat adjustments						

(b) Adjustment of FM BAND
BAND SELECT SWITCH : FM

Step	Adjusting Circuit	Connections Input	Connections Output	SG Frequency	Position of tuning dial	Adjustment	VTVM Oscilloscope
1	IF	Connect sweep generator of Output line to J406 TP2 (GND)	Connect sweep generator of input line to C105, C111 (GND)	10.7MHz	Low	T101	
2	Detector					T103	
3	Tuning Coverage	Connect FM SG to TP-1(H), TP2 (GND)	Connect VTVM to speaker terminals	87.35MHz (EUROPE) 87.4MHz (ITALY)	Low end	L002	MAX.
4				108.3MHz (EUROPE) 108.2MHz (ITALY)	High end	VCT-2	
5	Tracking	Connect FM SG to TP1 (H), TP-2 (GND)	Connect VTVM to speaker terminals	90.0MHz	90.0MHz	L001	MAX.
6				106.0MHz	106.0MHz	VCT-1	
7	Repeat adjustments						

(e) Adjustment of FM VCO
FM MODE SWITCH : FM STEREO

1) INPUT
SIGNAL : 60dB 22.5kHz DEV. AT 98MHz
CONNECTION : HOT TO TP-3 GROUND TO C204

2) ADJUSTMENT
ADJUST : SVR201
FREQUENCY : 19kHz ± 100Hz

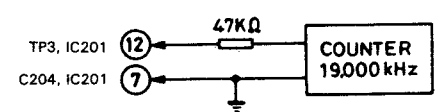

Turn SVR201 until the frequency counter reads 19.00 kHz ±100 Hz.

AMPLIFIER ADJUSTMENTS

- Make the following adjustments after first cleaning the head assembly and checking the adjustment of the head azimuth.

. PARTS LOCATION

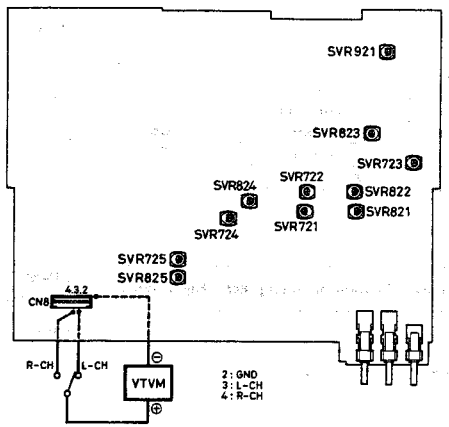

). Adjustments

) Playback output adjustment

DOLBY NR switch :	OFF
TAPE switch :	NORMAL
FUNCTION switch :	TAPE
BEAT—CANCEL Switch :	1
Test tape :	MTT-150 (DOLBY TAPE)

) TAPE " A "

Play the test tape and adjust SVR722 (left channel) and SVR822 (right channel) so that playback output becomes 450 mV.

) TAPE " B "

Play the test tape and adjust SVR721 (left channel) and SVR821 (right channel) so that playback output becomes 450 mV.

) Recording/playback frequency response adjustment

DOLBY NR switch :	OFF
TAPE switch :	NORMAL
Input signal :	—34.5dB, 1kHz, 10 kHz
Tape to be used :	NORMAL (AC—223, etc.)

) Set the FUNCTION switch to " LINE ".

) Introduce input signals to the LINE IN terminals, and, with the unit in the RECORD mode, change to the PAUSE mode.

(3) Record these input signals (1kHz → 10kHz → 1kHz → 10kHz).
(4) Set the FUNCTION switch to " TAPE ".
(5) Press the REWIND button and rewind the tape to the beginning of the recording just made.
(6) Press the PLAY button.
(7) With the 1kHz playback output value as 0dB, check to be sure that the value for 10kHz is within ± 1dB. If it is not, adjust SVR725 (left channel) and SVR825 (right channel).
(8) Repeat steps (1) to (7).

(c) Recording/playback output adjustment

DOLBY NR switch :	OFF
TAPE switch :	NORMAL
Input signal :	—14.5dB, 1kHz
Tape to be used :	NORMAL (AC—223, etc.)

(1) Set the FUNCTION switch to " LINE ".
(2) Introduce input signals to the LINE IN terminals, and, with the unit in the RECORD mode, change to the PAUSE mode.
(3) Record these input signals.
(4) Set the FUNCTION switch to " TAPE ".
(5) Press the REWIND button and rewind the tape to the beginning of the recording just made.
(6) Press the PLAY button.
(7) Adjust SVR723 (left channel) and SVR823 (right channel) so that the recording and playback output level differences become ± 1dB.
(8) Repeat setps (1) to (7).

(d) Checking the Recording/playback frequency response.

DOLBY NR switch : ON

Repeat steps (b) recording/playback frequency response (1) to (7).

(e) ALC adjustment

FUNCTION switch : LINE

Input signal : +5.5dB, 1kHz, (1V = 0dB)

(1) When signals are input to LINE IN adjust SVR921 so that the difference between the left and right LINE OUT levels is ± 0.5dB.

(f) Level meter adjustment

FUNCTION :	LINE
Input signal :	—12.5 dB (1 kHz)

(1) Set the FUNCTION switch to " LINE ".
(2) Introduce input signals to the LINE IN terminals.
(3) Adjust SVR724 (Left channel) and SVR824 (Right channel) so that output becames 400mV.

TAPE DECK ADJUSTMENTS

a. HEAD REPLACMENT AND AZIMUTH ADJUSTMENT

- After replacement, demagnetize the heads by using a head eraser.
- Be sure to clean the heads before attempting to make any adjustments.
- Be sure both channels (1 and 2) are the same level (Using a dual-Phenomenon oscilloscope).
- Set each volume and switch as shown below.
- GRAPHIC EQUALIZER VOLUME
  100Hz, 1kHz and 10kHz 0 (CENTER)
- SURROUND SWITCH : OFF

(a) Head replacement

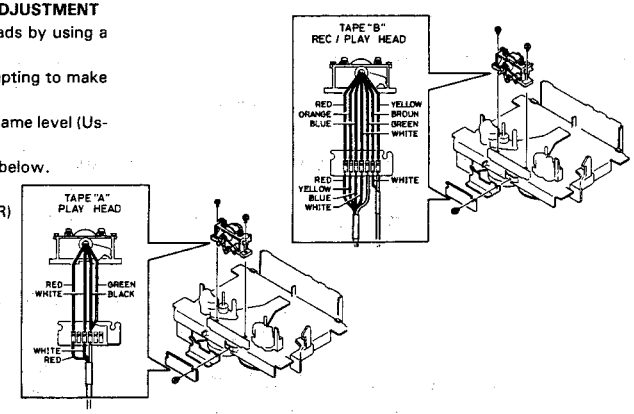

(b) Head azimuth adjustment

- The tape guide height-adjustment screw is correctly adjusted and so should not be moved.

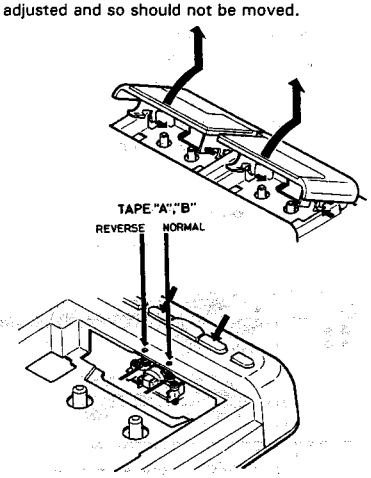

- After completion of the adjustment, use threadlock (TB1401B) to secure the azimuth-adjustment screw.

b. MOTOR REPLACEMENT AND SPEED ADJUSTMENT

(a) Motor replacement

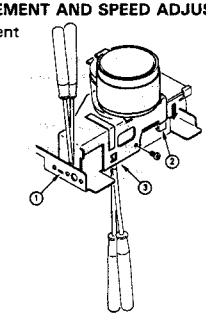

(c) Disassembly the cover ass'y (71, 72) of tape deck.

- Phase alignment

(1) Prepare a dual-phenomenon oscilloscope.
(2) Set so that the left and right ranges of the oscilloscope are the same.
(3) Play the test tape.
(4) Adjust so that the waveforms for the left and right channels are in alignment, as shown in the illustration.

- TAPE " A ", " B "

(1) Load a test tape (VTT-703, etc.: 10 kHz) for azimuth adjustment.
(2) Press the PLAY button (normal playback).
(3) Use a flat-tip (—) screwdriver to turn the screw for normal azimuth adjustsment so that the left and right outputs are maximized at the same phase during normal playback.
(4) Press the tape direction lever.
(5) Play the tape in the reverse mode.
(6) Use a flat-to-(—) screwdiver to turn the screw for reverse azimuth adjustment so that the left and right outputs are maximized at the same phase during reverse playback.
(7) Press the STOP button

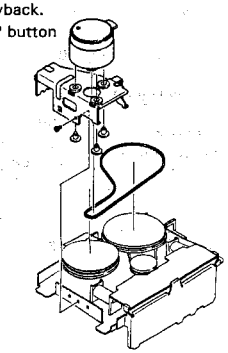

TAPE DECK ADJUSTMENTS

(b) Motor speed adjustments

- Make the adjustment near where the test tape finishes winding.
- Be sure to make the adjustment of the motor speed only after completion of the high-speed timing adjustment for tape deck A and tape deck B, and then making the normal-speed timing adjustment of decks A and B.
- Two types of test tape should be available beforehand.

MOTOR SPEED ADJUSTMENT	TEST TAPE
NORMAL SPEED	MTT—111 (etc.) : 3,000Hz
HIGH SPEED	TCW—211(etc.) : 1,500Hz

HIGH SPEED

(1) Insert the test tape (TCW—211, etc. 1,500 Hz) into tape deck A.
(2) Press tape deck A's PLAY button.
(3) Use a clip or similar device to hold the jumper wire for high speed. Connect the cilp's wire to ground.
The ground point is to be connected to the outer part of the LINE terminal.
(4) Set to the high-speed condition.
(5) Adjust SVR621 so that the frequency counter reading is 3,000 Hz.
(6) Press tape deck A's STOP button.
(7) Remove the clip that is being used to hold the jumper wire for high speed.
(8) Then insert the test tape into tape deck B.
(9) Press tape deck B's PLAY button.
(10) Use a clip or similar device to hold the jumper wire for high speed. Connect the cilp's wire to ground.
(11) Adjust SVR623 so that the frequency counter shown a reading of 3,000 Hz.
(12) Press tape deck B's STOP button.
(13) Remove the clip that is being used to hold the jumper wire for high speed.

NORMAL SPEED

(1) Set the dubbing speed selector to the normal speed setting.
(2) Insert the test tape (MTT-111, etc. 3,000 Hz) into tape deck A.
(3) Press tape deck A's PLAY button.
(4) Adjust SVR622 so that the frequency counter shows a reading of 3,000Hz.
(5) Press tape deck A's STOP button.
(6) Insert the test tape into tape deck B.
(7) Press tape deck B's PLAY button.
Adjust SVR624 so that the frequency counter shows a reading of 3,000 Hz.
(8) Press tape deck B's STOP button.

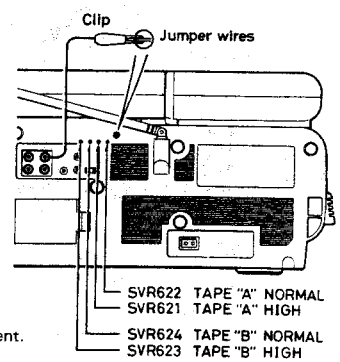

CHECKING THE MECHANISM TORQUES

- Clean the head, capstan and pinch roller before making any measurement.
- Check the torque and tension.

TAPE " A " TAPE " B "

Measuring	Rewind torque	Back tension	Tape tension
Cassette for measurement	PLAY:TW-2111A(FWD) PLAY:TW-2121A(REV) F. FWD/REW:TW2231	PLAY:TW-2111A(FWD) PLAY:TW-2121A(REV)	Drive-power cassette TW-2412(FWD) TW-2422A(REV)
PLAY	30~60gr•cm	2.0~5.0gr•cm	80gr or more
F. FWD	55~120gr•cm	–	–
REW	55~120gr•cm	–	–

TAPE DECK MECHANISM DESCRIPTION

a. Torque linkage

When the motor (406) operates, flywheels F and R (385 and 387), which are linked by the main belt (388), are caused to rotate.

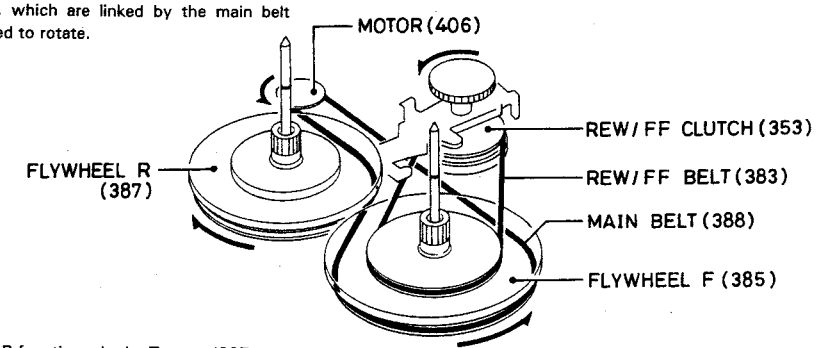

(a) Flywheels F and R function, via the T gears (367 and 371), to provide the take-up torque of reel assemblies F and R (345 and 344).
(b) Flywheel F provides drive force to the main gear (376) and the RF cam gear (378).

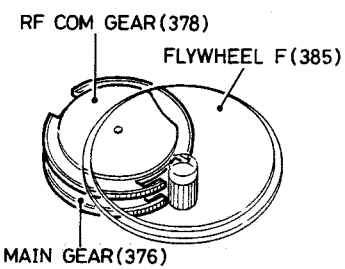

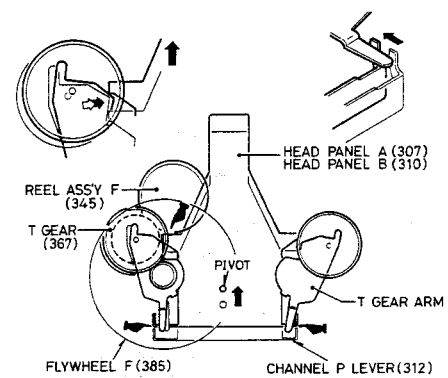

(c) When pulses are input, solenoid A functions to pull the M trigger arm (374), thus freeing the main gear; the pivot part of head panel B (310) presses the internal cam, thereby activating the start, after which the drive force of flywheel F is received.
The main gear (to which the force of flywheel F is applied) functions to press head panels A and B (307 and 310) at the internal cam, thereby causing them to move, and thus resulting in the PLAY condition. The moving head pannels, A and B, activate the following:
(1) The T gear arms (365 and 369) are restricted in one direction at the final stage and are freed in the other direction, thus resulting in coupling of the T gears and reel assemblies F and R (345 and 344).
(2) E stopper levers A and B (331 and 330) are caused to interlock, thus rejecting an ejection.
(3) The A-PLAY switch (S642) is switched ON.

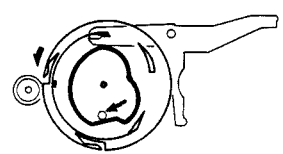

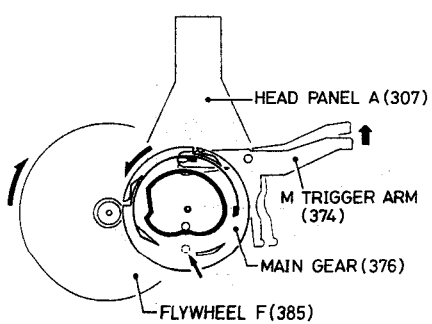

(d) The subsequent pulse is input during the rotation of the main gear, and solenoid A again pulls the M trigger arm, and when that happens the change slide lever (395) is caused to move at the other end, after which the outer cam of the main gear maintains that movement.
The moving change slide lever activates the following actions:

(1) The channel P lever (312) and the pinch roller spring (311) are caused to interlock, and pinch roller arm assemblies F and R (321 and 315) are selected and are pressed tightly against the capstan.
(2) The head is caused to reverse so that the slit is aligned in the reverse direction.

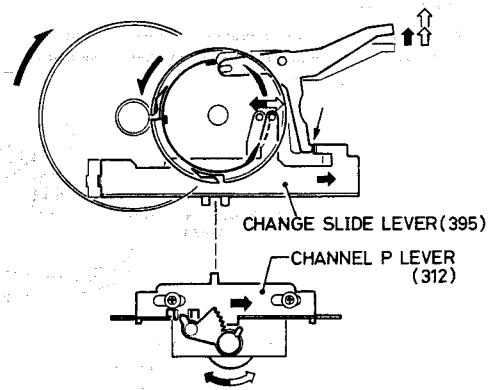

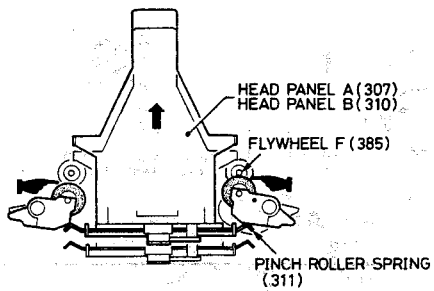

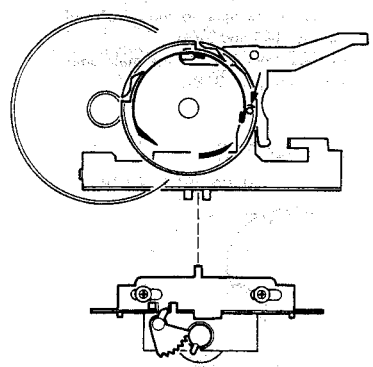

(e) Pulses are input during play, causing solenoid B to pull the RF trigger arm (350), so that the RF cam gear is freed; the pivot part of the panel kick lever (380) presses the internal cam and activates it, after which it receivls the drive force of flywheel F.
(f) For the RF cam gear, which has received the drive force of flywheel F, its internal cam presses the panel kick lever, after which head panel A is pressed and returned, thus causing the head and pinch roller to move, thereby facilitating high-speed travel of the tape.

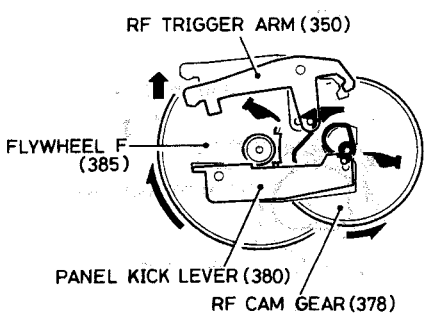

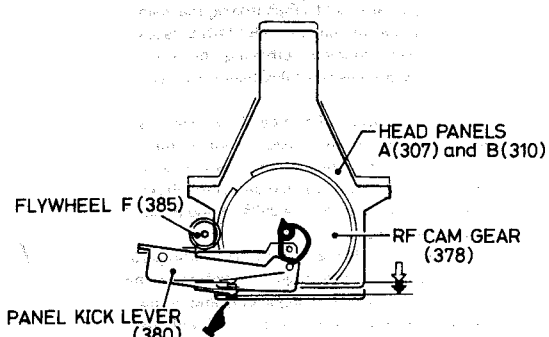

(g) The REW/F.F. clutch is caused to engage with reel assemblies F and R.
(1) Usually, the pivot of the REW/F.F. clutch is caused, by the REW/F.F. belt tension and direction of rotation, to pass through the rail of the outer cam and to stop at the peak point, taking position at the F side.
(2) When, during the rotation of the RF cam gear, the subsequent pulse is input and solenoid B again pulls the RF trigger arm, the holder that is at the other edge functions to hold the REW/F.F. clutch, after which it is led into the inner path of the outer cam and stops at the peak point.
In other words, it takes position at the R side.

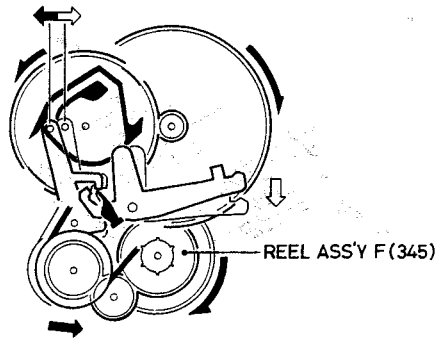

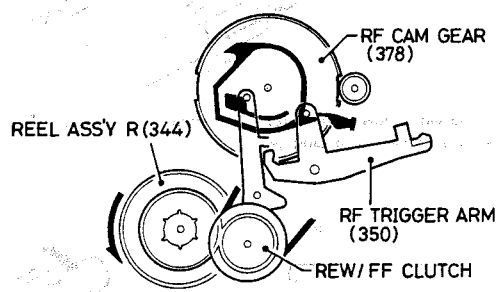

COMPACT-DISC PLAYER DESCRIPTION

CD MECHANISM OPERATION

The rotation of the tray-loading gear (577), which opens and closes the compact-disc tray (91), is obtained from the rotational force of the tray-loading motor (575); this force passes through the pulley (568), driven gear (571) and drive gear (574) to the tray-loading gear.
There are three rack gears on the bottom of the compact-disc tray; they perform the following functions.
(a) Rack 1 opens and closes the tray, and, at the final stage of closing, causes the timing gear (539) to rotate.

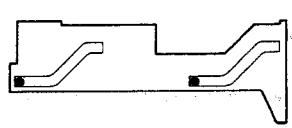

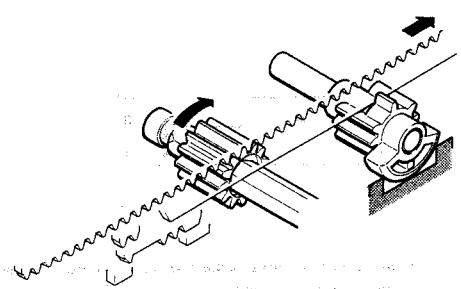

(b) The timing gear, which restricts the chassis elevating slides (542 and 543), reverses and then functions to restrict the disc tray.

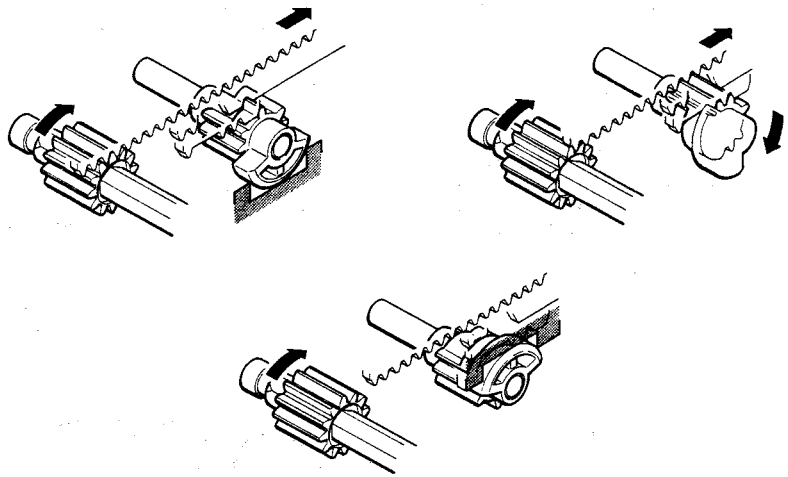

(c) The chassis elevating slides, now unrestricted, are caused to move toward the front by the timing gear, after which they receive the drive force of the tray loading gear.

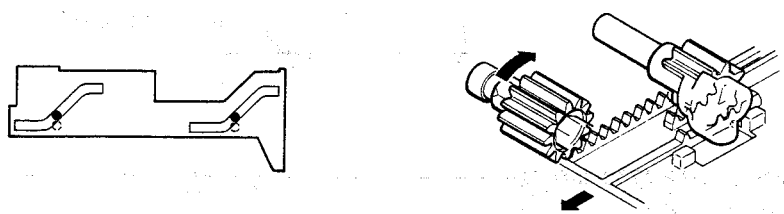

(d) The chassis elevating slides, having received the drive force of the tray loading gear, are pulled more toward the front, causing the chassis (547) to move in the upward direction to be horizontal, thus completing the chucking of the disc.

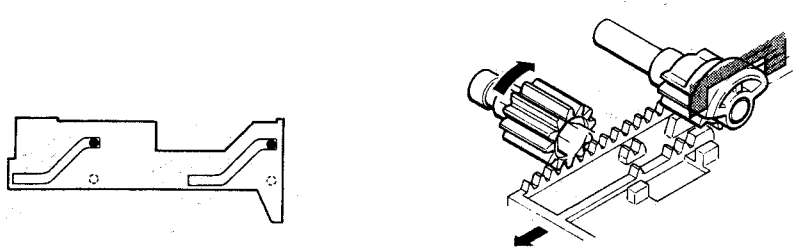

e) The two remaining racks of the chassis elevating slides and the tray, combined with the first, function to effectively perform the rotation and restriction of the timing gear.

- Note that the mechanism of the compact-disc player is very delicate.
- It is very important that the spindle motor (554) which rotates the disc), and the sled motor (553) which causes the disc signals to be tracked), as well as the gear and other components, operate smoothly, without eccentricity.
- When handing the pick-up, take care not to exert excessive force, and particular care should be taken not to touch the lens or the drive circuit's printed-circuit board pattern.

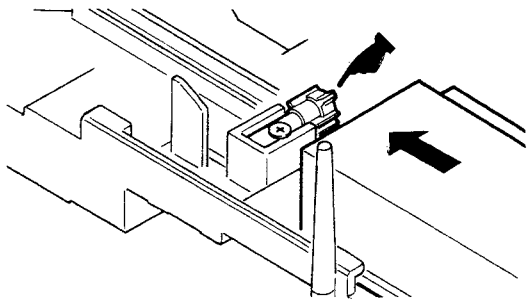

a. **REMOVAL OF THE COMPACT-DISC PLAYER SECTION FROM THE UNIT**

(Refer to " Removal and installation " on page 5.)

b. When the compact-disc tray is reinserted, the reinsertion can be facilitated by tilting downward until the rachet part of the timing gear is in contact in the forward direction.

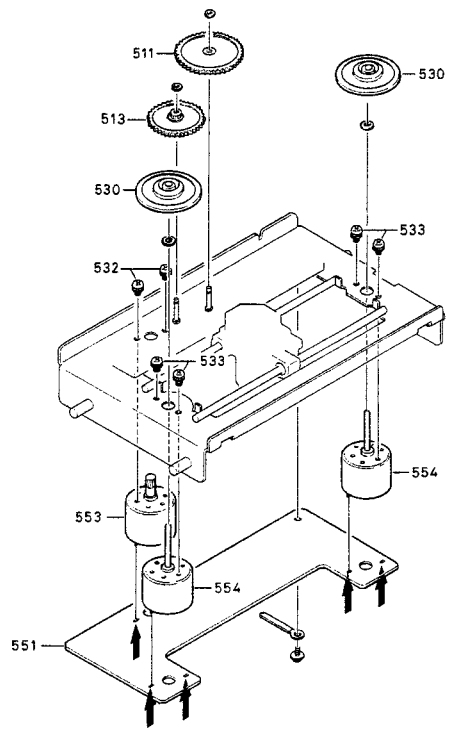

c. Disassembly of the compact-disc mechanism

- Care must be taken, when removing the printed-circuit board, not to damage the limit switches (S401 and S402).

(a) Replacement of the sled motor (553)

(1) Remove the printed-circuit board (551) holding screw (555).

(2) Remove the two fixers (510 and 512) and the pick-up sending gears (511 and 513).

(3) Remove the two sled motor holding screws (532).

(4) Melt the solder and remove the motor. Be sure at this time that there is nothing to interfere with the close contact of the new motor and the printed-circuit board.

(5) . Install the new motor in place and solder it.

(b) Replacement of the spindle motor

- Prepare dial-type calipers.
- First have ready the new turntable (530) for replacement, and the new special washers (531). Remove turntable cannot be reused, because they are damaged by the heat from the soldering iron.

(1) Follow steps (1) and (2) of (a) above.

(2) The attached bonding material can be dissolved by using a 60W soldering iron to heat the shaft at the lower part of the turntable (530) for about one minute.

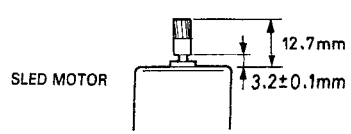

(3) The turntable can then be removed from the shaft by very carefully applying force upward at the center of the lower surface of the turntable.
(4) Remove the two spindle motor holding screws (553), and then melt the solder of the printed-circuit board and remove it.
(5) Secure the new motor to the chassis.
(6) Install the special washer (531) to the motor shaft.
(7) Apply a small amount of a mixture (in a 1 : 1 ratio) of the adhesives Three Bond 2001 and 2105 to the motor shaft.
(8) Press the new turntable onto the shaft gently and carefully. Secure it at the dimension shown in the illustration, and use a cotton swab to wipe away any adhesive that has come out from inside the hole.
(9) Solder the motor to the printed-circuit board.

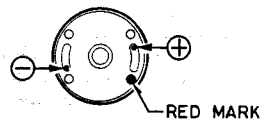

SPINDLE MOTOR

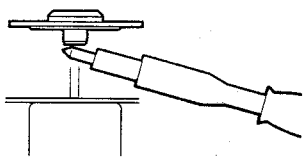

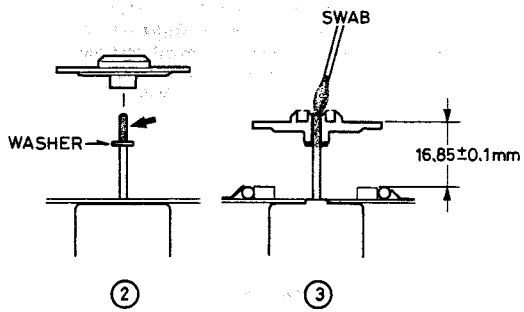

(c) Replacement of the pick-up (519)

(1) With the pick-up in the vicinity of the center, raise the base chassis (547).
(2) Remove the four spring plates (518) and free the rails (520).
(3) Remove the rear rail to either the left or right.
(4) Using two fingers, take out the pick-up without prying it.
(5) Install the new pick-up to the front rail; then place it on, and secure it to, the center part of the rack gear (516).

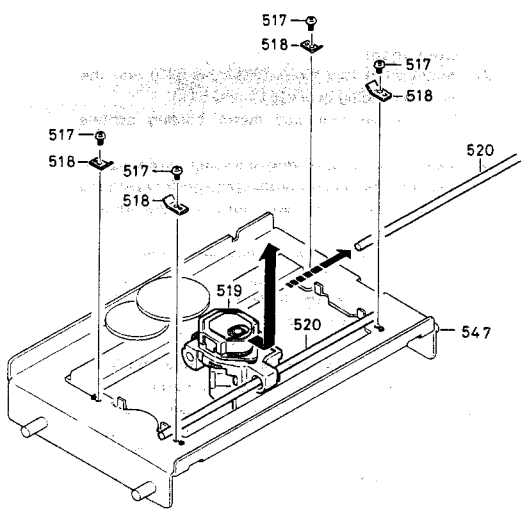

(6) Install and secure the rear rail.
(7) When the pick-up is replaced or reconditioned, be sure to clean the rails thoroughly and then apply a coating of FLOIL (G-474B) where shown in the illustration.
(Be very careful, at this time, to absolutely not touch any other components.)
(8) When installing the pick-up sending gear (511), contract the rack gears (515 and 516) and the backlash spring (515).

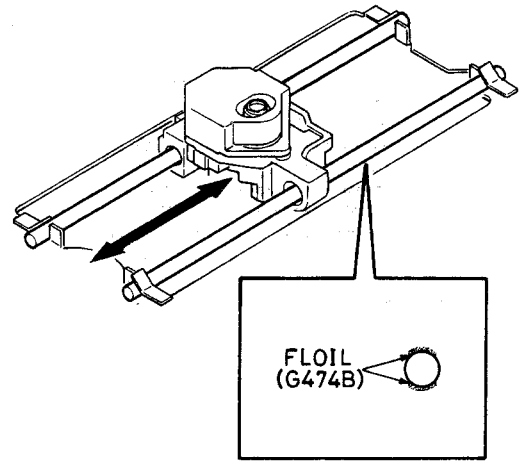

(d) Replacement of the loading motor
(1) Remove the belt (566) from the loading motor pulley.
(2) Remove the two motor installation screws (565), and install the new motor.
(e) Signals that indicate the presence or not of a disc are sent from the disc A photosensor to IC453 (pin 18) and from the disc B photosensor to IC453 (pin 17).

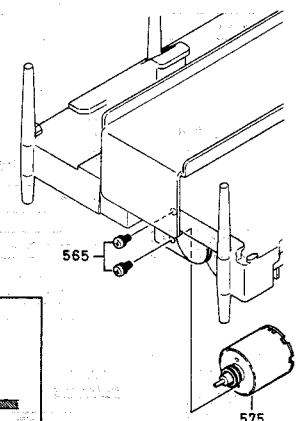

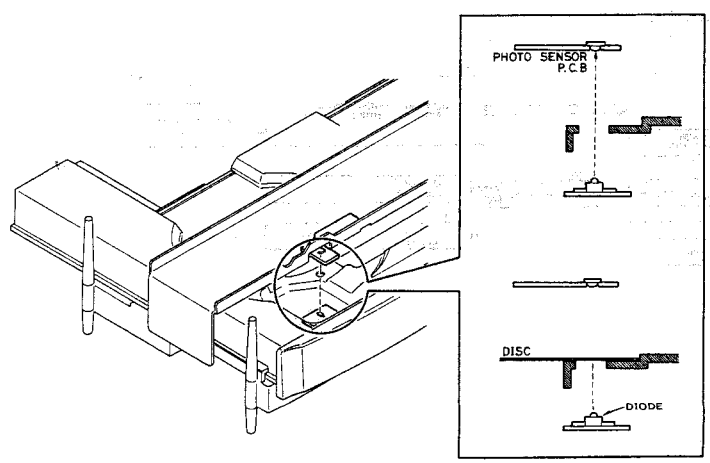

COMPACAT-DISC PLAYER ADJUSTMENTS

a. BEFORE MAKING CIRCUIT ADJUSTMENT

(a) Explanation of the compact-disc player

The laser beam generated within the pick-up strikes the recorded pit surface of the disc, and play occurs by the reflected light being read as signals.
The focus servo and tracking servo are used so that the pick-up precisely traces the recorded pits. First, therefore, output from the pick-up is input to IC301.
After the signals are amplified at IC301, the signals are sent to IC351. At IC351, focus servo and tracking servo are applied, and signals are then sent to IC401 so that disc signals can be read precisely.
Nex, signals are sent from IC401 to IC402, and signals are sent to the pick-up drive motor (sled motor). The pick-up is then caused to move in such a way that it traces precisely.
RF signals from IC301 are transmitted to IC551, and, at IC551 these signals are subjected to EFM demodulation, and the read-out data are transmitted to the IC981 D/A converter.
At the same time, data are sent (as a result of the clock signals of the read-out data) to control so that the rotational speed of the spindle motor becomes fixed at the linear velocitv (CLV). Signals input from the operation key switches of the CD player are transmitted to the IC501 microcomputer, thus resulting in system control.

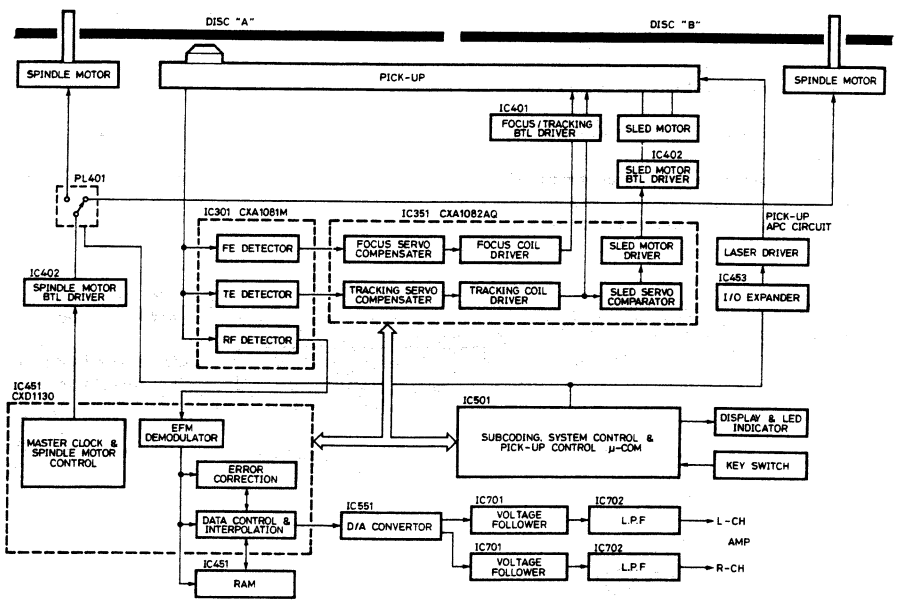

COMPACT-DISC PLAYER ADJUSTMENTS

b. PREPARATION FOR ADJUSTMENTS

(a) Measuring instruments, tools and filter
(1) Test disc : YEDS18 (Sony)
(2) Oscilloscope : SS5711 (100MHz or dual phenomenon)
or, Memoryscope : DSS6521 (Storagescope)
(3) Digital voltmeter (Input impedance 1MΩ or more)
(4) Oscillator (400Hz, 800mV RMS)
(5) Frequency counter (5MHz; or more)
(6) Frequency counter, prove (10:1)
(7) Screwdrivers (non-metallic) for adjustments.
(8) Filter
(9) Quartz timer
(10) Quartz timer, 1/10 frequency division probe.

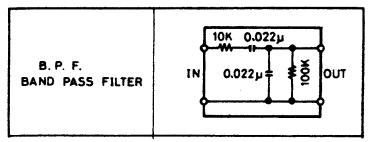

(b) Component locations diagram
- Connections are made to actual test points by using connectors CN101, 102 and 103. Work can be simplified by preparing adapting connectors.

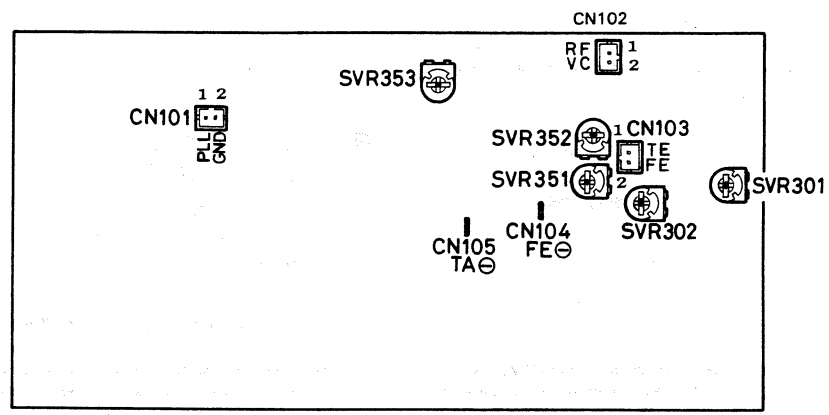

CD MAIN P.C.B

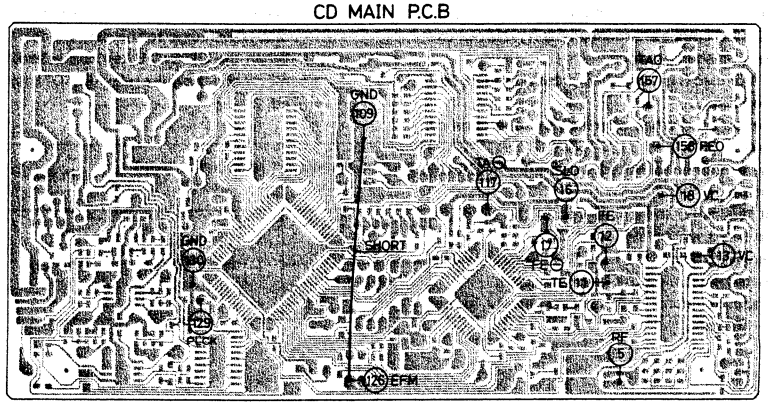

c. SERVICE MODE

Among the IC501 programs, a service program routine is included in addition to the ordinary program routines.
This service mode is employed when making adjustments of the compact-disc player.

(a) How to set to the compact-disc player service mode
(1) Disconnet the power cord from its electrical outlet.
(2) Take out the three batteries.
(3) Connect a diode (GMA01, etc.) to pin 23 and pin 60 of IC501
(4) Connect the power cord to the electrical outlet.
(5) The unit will then be in the service mode.
(6) When the use of the service mode is finished, disconnect the power cord from its electrical outlet.
(7) Remove the diode connected between pin 23 pin 60 of IC501.

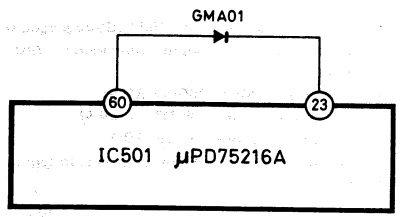

(b) Description of the operation of the service mode
(1) When the service mode is set, the fluorescent display will appear as shown in the illustration.

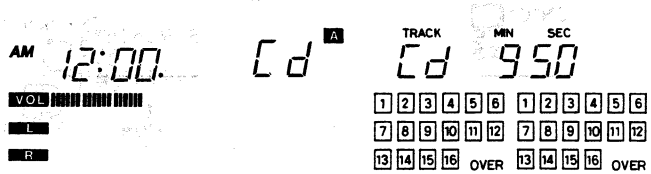

(2) The servo operation can be canceled by pressing the STOP key during the operation of the service mode.
(3) Because the PLAY/PAUSE key is for testing of the printed-circuit board individually, it is not used as a finished product.
(4) Disc A or disc B is moved by pressing the FF key or the FR key.
These are used when checking the operation of the sled motor.
(5) Focus search is activated when the PROGRAM key is pressed.
If, at this time, there is a disc in the tray, the focus servo will be switched ON.
If there is no disc in the tray, focus search will be activated each time the key is pressed.
The spindle motor will operate slowly in the CLV—S mode.
(6) When the REPEAT key is pressed while the focus servo in ON (item (5) above), the tracking servo, sled servo and the CLV—A (the servo during the play mode) will be switched ON, and the unit will change to the play mode.
(7) When the DISC A/B key is pressed, the spindle motor and the drive relay (PL401) can be switched.

d. ADJUSTMENTS

(a) PLL VCO free-running adjustment
(1) Set to the service mode.
(2) Short-circuit test points TP126 (EFM) and TP109 (GND).
(3) Connect a probe (10 : 1) to a frequency counter.
(4) Connect a probe to the test point.
(5) Switch ON the unit's power.
(6) Take out the disc tray.
(7) Adjust SVR353 so that the frequency counter reading is 4.27 MHz ±0.01 MHz.
(8) After the completion of the adjustment, cancel the short-circuit between test points TP126 and TP109.

Measuring instrument	Test disc	Short-circuit location	Input connection point	Output connection point	Adjustment location	Adjustment value
Frequency counter	———	TP126 (EFM) TP109 (GND)	———	CN101,①,② TP129 (PINK) TP130 (GND)	SVR353	4.27 MHz ±0.01 MHz

(b) Tracking balance adjustment
(1) Switch ON the unit's power.
(2) Load a test disc for disc A and disc B.
(3) Switch OFF the unit's power.
(4) Set to the service mode.
(5) Press the FF and FR switches to move the pick-up to below disc A.
(6) Press the PROGRAM switch.
(7) The focus servo will switch ON.
(8) Connect an oscilloscope to the test points.
(9) Adjust SVR301 so that, as shown in the illustration, the oscilloscope's waveforms are vertically symmetrical.
(10) Press the STOP key to disc's rotation.
(Each servo will be switched OFF.)
(11) Press the FF and FR switches to move the pick-up to below disc B.
(12) After pressing the DISC A/B switch, press the PROGRAM switch to switch ON the focus servo.
(13) Monitor the TE signal on the oscilloscope and check its waveform.

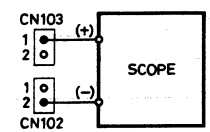

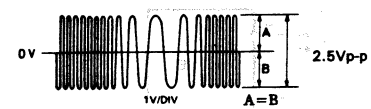

(Fig. 1)

Measuring instrument	Test disc	Input connection point	Output connection point	Adjustment location	Adjustment value
Oscilloscope	YEDS18	———	CN103,① CN102,② TP11:TE TP18 : VC	SVR301	Waveform symmetry A = B (Fig.1)

(f) Sled motor offset voltage adjustment.

(1) Press the OPEN/CLOSE switch so that the disc tray is in the open condition.

(2) Connect a DC voltmeter at both ends of the compact-disc mechanism's sled motor.

(3) Turn SVR401 so that the DC voltmenter's reading is 0 ±50mV.

(4) Press the OPEN/CLOSE switch so as to close the disc tray.

Measuring instrument	Output connection point	Adjustment location	Adjustment value
DC voltmeter	Sled motor terminals	SVR401	0 ± 50mV

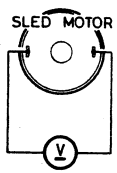

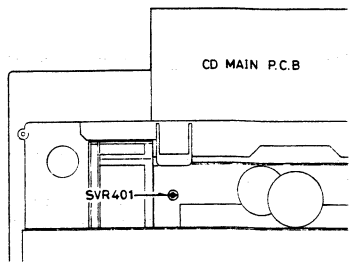

Measure the voltage by using the hole in the bottom lid (95).

(g) Checking the audio timer's time discrepany •
Because the time discrepancy changes according to the room temperature, the adjustment should be made at a temperature of 25°C.

(1) Disconnect the unit's power cord from the electrical outlet.

(2) Load the three batteries (back-up batteries in the event of a power interruption) into the unit.

(3) Have available a quartz timer and a 1/10 frequency-division probe.

(4) Connect the quartz timer and the frequency-division probe between test points TP58 (T-ADJ) and TP42 (GND).

(5) Turn the CT501 trimmer to adjust so that the frequency counter reading is ±0.1 second/day.
(If a reciprocal counter is used instead of the quartz timer, adjust to 2,048Hz ± 0.012Hz.)

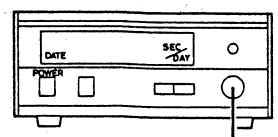

Measuring instrument	Output connection point	Adjustment location	Adjustment value
Quartz timer	TP58 : (T•ADJ) TP42 : (GND)	CT501	±0.1 SEC/-DAY

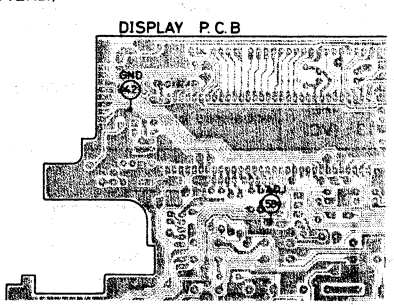

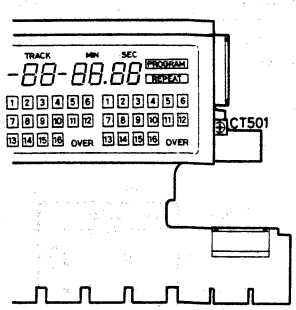

e. TEST POINT WAVEFORMS

These are the standard waveforms for the test points.

① TP5 (RF) MODE : PLAY GND : TP18 (VC)
V:200mV/div (AC) H : 500n sec/div

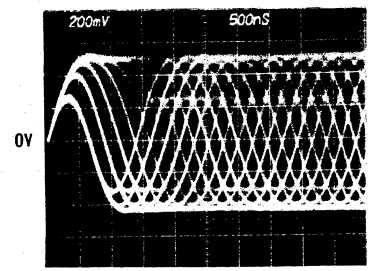

② TP126 (EFM) MODE : PLAY
GND : TP109 (GND1)
V : 1V/div H : 500n sec/div

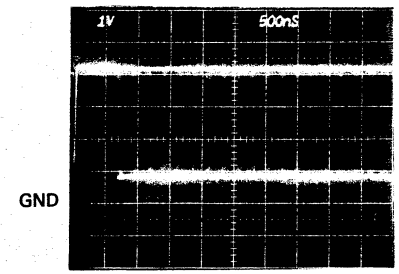

③ TP12 (FE),TP11(TE) MODE : PLAY
GND : TP18 (VC)
V1 : 200mV/div,V2 : 500mV/div H : 5m sec/div

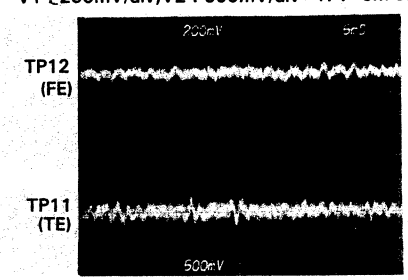

④ TP158 (FEO),TP157(TAO) MODE : PLAY
GND : TP18 (VC)
V1, V2 : 500mV/div H : 5m sec/div

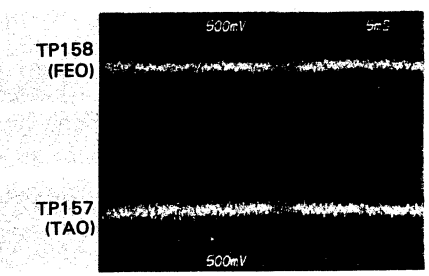

⑤ TP5, TP157, TP11, TP16
MODE : FWD SKIP
GND : TP18 (VC)
V1,2,3 : 1V/div H : 5m sec/div
V4 : 2V/div H : 5m sec/div

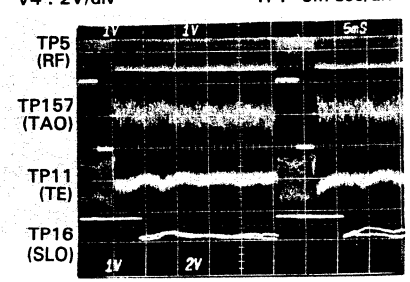

⑥ TP5, TP157, TP11, TP16
MODE : BACK SKIP
GND : TP18 (VC)
V1,2,3 : 1V/div H : 5m sec/div
V4 : 2V/div H : 5m sec/div

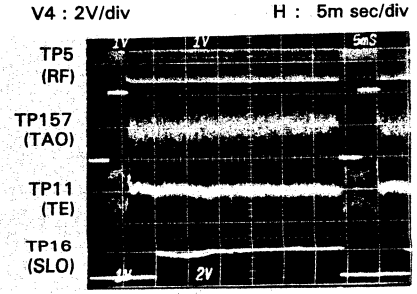

COMPACT-DISC PLAYER ADJUSTMENTS

⑦ TP5, TP157, TP11, TP16
MODE : FWD SEARCH
GND : TP18 (VC)
V1,2,3,4 : 1V/div H : 2m sec/div

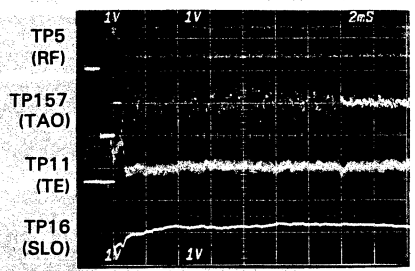

⑧ TP5, TP157, TP11, TP16
MODE : BACK SEARCH
GND : TP18 (VC)
V1,2,3,4 : 1V/div H : 2m sec/div

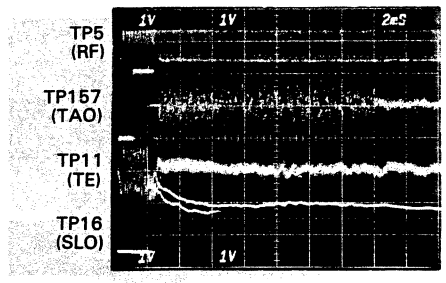

⑨ TP5, TP157, TP11, TP16
MODE : FWD SEARCH
GND : TP18 (VC)
V1,2,3,4 : 1V/div H : 1m sec/div

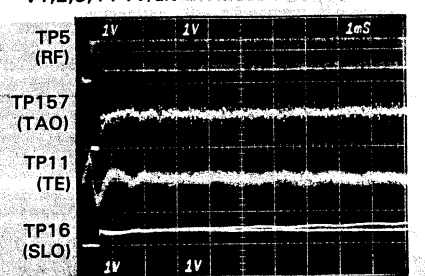

⑩ TP5, TP157, TP11, TP16
MODE : BACK SEARCH
GND : TP18 (VC)
V1,2,3,4 : 1V/div H : 2m sec/div

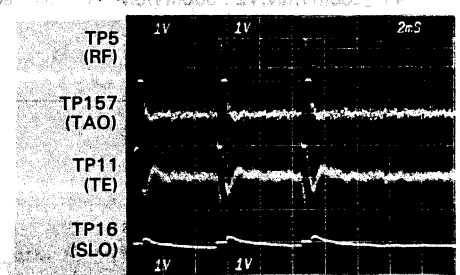

⑪ IC451-53,54 MODE : PLAY
GND : TP109 (GND1)
V1,2 : 2V/div H : 100n sec/div

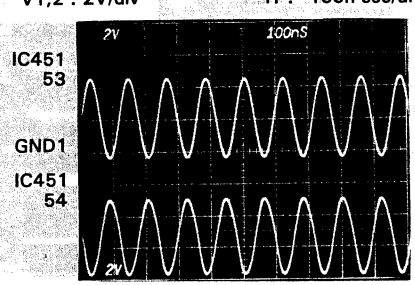

⑫ TP129(PLCK) MODE : PLAY
GND : TP130 (GND1)
V : 2V/div H : 100n sec/div

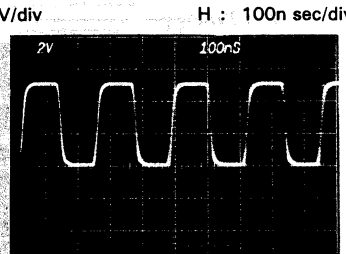

COMPACT-DISC PLAYER AND CASSETTE DECK CONTROL CIRCUITRY

a. **Compact-disc player and cassette tape deck circuitry**

Block diagram

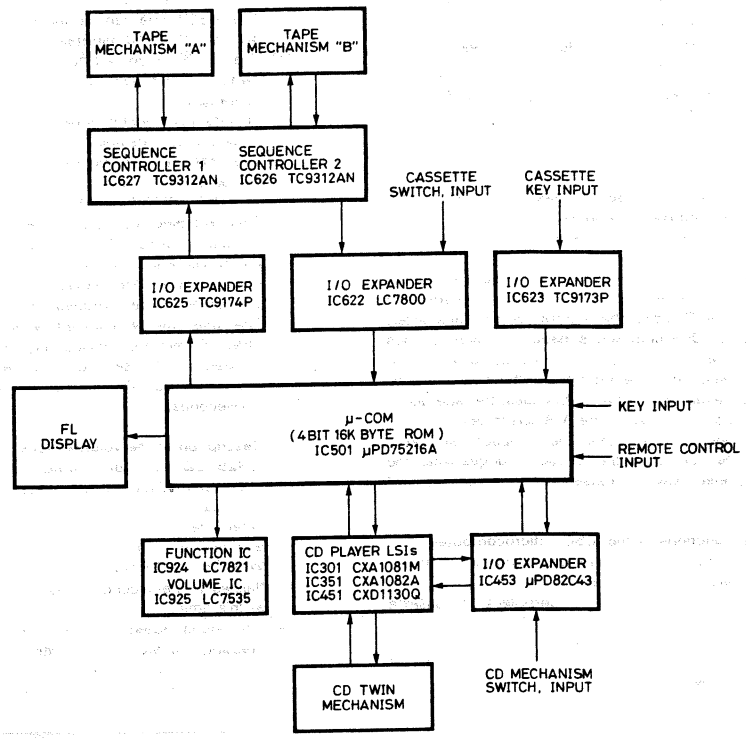

b. **Layout of keys and switches**

KEY \ SEG.	SEG.7 (Pin 60)	SEG.6 (Pin 61)	SEG.5 (Pin 62)	SEG.4 (Pin 63)	SEG.3 (Pin 1)	SEG.2 (Pin 2)	SEG.1 (Pin 3)	SEG.0 (Pin 4)
KEY 0 (Pin 21)	12/24H	S525 POWER	S521 TUNER FUNCTION	S517 TIMER/ SLEEP	S513 SET	S509 CD DISC A/B	S505 CD FWD.SKIP	S501 CD REPEAT
KEY 1 (Pin 22)	—	—	S522 LINE FUNCTION	S518 MEMORY 1/2	S514 HOUR	S510 CD DUBBING	S506 CD BACK SKIP	S502 CD STOP
KEY 2 (Pin 23)	CD SERVICE MODE	TAPE 1 SERVICE MODE	S523 VOLUME UP	S519 CD FUNCTION	S515 MINU	S511 TAPE DUBBING	S507 CD OPEN/CLOSE	S503 CD PROGRAM (MEMORY)
KEY 3 (Pin 24)	KEY SERVICE MODE	TAPE 2 SERVICE MODE	S524 VOLUME DOWN	S520 TAPE FUNCTION	S516 TIMER	S512 TAPE HIGH SPEED DUBBING	S508 CD EDIT	S504 CD PLAY/PAUSE

SWITCH [KEY]

a. Compact-disc player and cassette tape deck circuitry

Block diagram

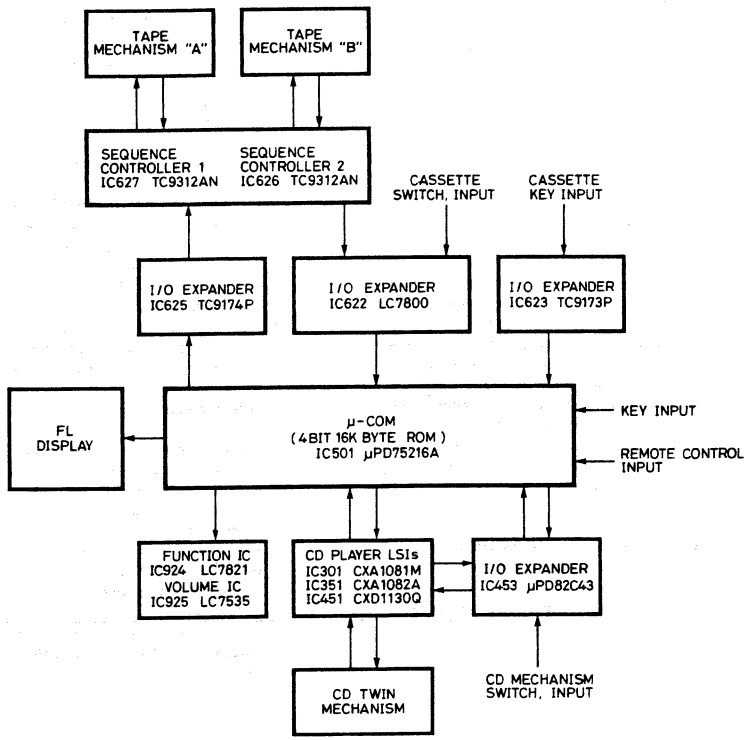

b. Layout of keys and switches

KEY \ SEG.	SEG.7 (Pin 60)	SEG.6 (Pin 61)	SEG.5 (Pin 62)	SEG.4 (Pin 63)	SEG.3 (Pin 1)	SEG.2 (Pin 2)	SEG.1 (Pin 3)	SEG.0 (Pin 4)
KEY 0 (Pin 21)	12/24H	S525 POWER	S521 TUNER FUNCTION	S517 TIMER/ SLEEP	S513 SET	S509 CD DISC A/B	S505 CD FWD.SKIP	S501 CD REPEAT
KEY 1 (Pin 22)	—	—	S522 LINE FUNCTION	S518 MEMORY 1/2	S514 HOUR	S510 CD DUBBING	S506 CD BACK SKIP	S502 CD STOP
KEY 2 (Pin 23)	CD SERVICE MODE	TAPE 1 SERVICE MODE	S523 VOLUME UP	S519 CD FUNCTION	S515 MINU	S511 TAPE DUBBING	S507 CD OPEN/CLOSE	S503 CD PROGRAM (MEMORY)
KEY 3 (Pin 24)	KEY SERVICE MODE	TAPE 2 SERVICE MODE	S524 VOLUME DOWN	S520 TAPE FUNCTION	S516 TIMER	S512 TAPE HIGH SPEED DUBBING	S508 CD EDIT	S504 CD PLAY/PAUSE

SWITCH [KEY]

c. IC501 μPD75216A μ-COM

TERMINAL No.	TERMINAL NAME	I / O	TERMINAL FUNCTION	FUNCTION DESCRIPTION
1	S3	O	S3	SEGMENT OUTPUT (FL DISPLAY)
2	S2	O	S2	〃
3	S1	O	S1	〃
4	S0	O	S0	〃
5	INT4	I	SENS	SENS SIGNAL INPUT (ALSO FUNCTION AS EXTERNAL INTERRUPT TERMINAL)
6	PO1	O	SQCK	CLOCK SIGNAL FOR SUBO INPUT (SIO INTERNAL CLOCK PULSE OUTPUT)
7	PO2	I	SUBQ	SUBQ INPUT
8	PO3	I	FOK	FOK SIGNAL INPUT
9	INTO	I	SCOR	SCOR ↓ EXTERNAL INTERRUPT
10	INT1	I	IR	REMOTE CONTROL SIGNAL INPUT
11	INT2	I	AC_ON	POWER-INTERRUPTION CHECK TERMINAL
12	P13	I	GFS	GFS SIGNAL INPUT
13	P20	O	A_MUTE	AUDIO ANALOG MUTE
14	P21	O	CE	CHIP ENABLE (LC7821, LS7535)
15	P22	O	STB	STROBE OUTPUT (TC9173, TC9174)
16	BUZ	O	TIM_ADJ	PULSE OUTPUT FOR CLOCK ADJUSTMENT
17	P30	I / O	DATA0	DATA BASE (PERIPHERAL IC)
18	P31	I / O	DATA1	〃
19	P32	I / O	DATA2	〃
20	P33	I / O	DATA3	〃
21	P60	I	KEY0	KEY INPUT (KEY, DIODE SELECT SWITCH)
22	P61	I	KEY1	〃
23	P62	IO	KEY2	〃
24	P63	I	KEY3	〃
25	P40	O	SCAN1	SCAN OUTPUT (FOR LC7800)
26	P41	O	SCAN2	〃
27	P42	O	CS	CHIP SELECT (FOR LC7800)
28	P43	O	PROG	CLOCK PULSE OUTPUT (FOR μPD82C43)
29	PPO	O	CD_PLAY	CD OPERATION LED OUTPUT
30	X1	I	X1	MAIN•SYSTEM•CLOCK OSCILLATOR TERMINAL
31	X2	I	X2	〃
32	Vss	—	Vss	GND
33	XT1	I	XT1	SUB SYSTEM•CLOCK OSCILLATOR TERMINAL(32.768kHz)
34	XT2		XT2	〃
35	P50	O	P_CON	POWER CONTROL OUTPUT
36	P51	O	CD_DATA	COMMAND OUTPUT (DATA)
37	P52	O	CD_CLK	COMMAND OUT OUTPUT (LATCH)
38	P53	O	CD_XLT	COMMAND OUT OUTPUT (CLOCK)
39	RESET	I	RESET	RESET SIGNAL INPUT

TERMINAL No.	TERMINAL NAME	I / O	TERMINAL FUNCTION	FUNCTION DESCRIPTION
40	T0	O	T0	DIGIT OUTPUT (FL DISPLAY)
41	T1	O	T1	DIGIT OUTPUT (FL DISPLAY)
42	T2	O	T2	〃
43	T3	O	T3	〃
44	T4	O	T4	〃
45	T5	O	T5	〃
46	T6	O	T6	〃
47	T7	O	T7	〃
48	T8	O	T8	〃
49	T9	O	T9	〃
50	S15	O	S15	SEGMENT OUTPUT (FL DISPLAY)
51	S14	O	S14	〃
52	S13	O	S13	〃
53	S12	O	S12	〃
54	S11	O	S11	〃
55	S10	O	S10	〃
56	VLOAD	I	VLOAD	PULL-DOWN RESISTANCE CONNECTION TERMINAL (FL CONTROLLER/DRIVER)
57	VPRE	I	VPRE	OUTPUT BUFFER POWER-SUPPLY TERMINAL (FL CONTROLLER/DRIVER)
58	S9	O	S9	SEGMENT OUTPUT (FL DISPLAY)
59	S8	O	S8	〃
60	S7	O	S7	〃
61	S6	O	S6	〃
62	S5	O	S5	〃
63	S4	O	S4	〃
64	VDD	–	VDD	POWER

d. Circuit operation

(1) The FL (fluorescent luminescent) display shows the clock when the power switch is OFF.
(2) When the power switch is switched ON, pin 35 of IC501 becomes HIGH level.
(3) The fluorescent tubes of the fluorescent display (10 digits, 16 segments) display the data.
(4) When AC power is not supplied, pin 11 of IC501 becomes LOW level, and all data displayed by the fluorescent display disappear.
(5) Signals from the keys are not received at this time. In addition, the 2-MHz oscillation frequency is also stopped. (In the AC power-supply connected condition, 2 MHz and 32 kHz both oscillate.)
(6) The input from the remote-control transmitter is input from the receptor (infra-red) to pin 10 of IC501.
(7) When the FUNCTION switch " CD " selection is made, signals (2,048 kHz) for frequency adjustment of the clock are input from pin 16 of IC501.
(8) Pin 13 of IC501 is the mute signal pin.
The times that muting is applied are as follows.
After POWER switch is switched ON:
1.4 sec. HIGH level.
After FUNCTION switch setting change:
1 sec. HIGH level.
After POWER switch is switched OFF:
3 sec. HIGH level

(9) IC453 is used for the compact-disc player.
(10) Pins 13 - 20 of IC453 are for input.
(11) Pin 22 of IC453 becomes LOW level when the FUNCTION switch is switched ON.
(12) Pins 40 - 49 of IC501 generate 488 - μsec. pulses (from −30V to 5V).

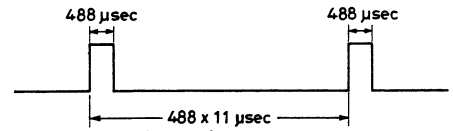

e. Remote-control transmitter

(1) The remote-control transmitter is exclusively for use with the model M-CD950.
(2) When one of the keys (32 keys) of the remote-control transmitter is pressed, there is transmission from the IC within the remote-control transmitter.
(3) The KEY OFF judgment is made 220 microseconds after the cessation of the continuous pulse signals.
(4) The selection of the functions of the twin compact-disc player and of the double-cassette tape decks are both combined in the A/B select key.
(5) For functions other than the compact-disc player and the tape decks, the function changes when the A/B select key is pressed, after which the A/B operation occurs.

f. Main functions of the IC501 microcomputer

(1) Key, remote-control transmitter and switch input
(2) Compact-disc player control
(3) Control of two sequence controllers (in cassette section)
(4) Clock and timer functions
(5) VOLUME and FUNCTION IC control POWER switch ON/OFF
(6) Fluorescent display indications

g. Clock and timer description

(1) Operations are activated by the SET, HOUR, MINUTE, TIMER, TIMER/SLEEP and MEMORY 1/2 keys.
(2) When the SET key is pressed and held for two seconds or longer, the mode changes to the mode for setting the present time. At this time, the hour indication will begin flashing in one-second cycles. If the SET key is pressed for two seconds or less, the mode will change to the mode for setting the timer time.
(3) HOUR key:
for setting the hour
(4) MINUTE key:
for setting the minute
(5) TIMER key:
for setting the switch-ON time
(6) TIMER/SLEEP key:
for selection of the mode
(7) MEMORY 1/2 key:
for exchanging timer times 1 and 2
(8) The timer can be set (by the memory, while the power is ON) to either 90, 60, 50, 40, 30, 25, or 15 minutes.
(9) The time at which the timer is switched ON becomes FUNCTION and VOLUME value at the timer of time setting.
(10) The SLEEP time can be set to either 90, 60, 50, 40, 30, 20, or 10 minutes.
(11) The SLEEP mode will be canceled if the POWER switch is switched OFF during the SLEEP mode operation.
(12) Simultaneous SLEEP mode and TIMER mode operations are also possible.
(13) The switching sequence of the TIMER/SLEEP modes is:
OFF→SLEEP→TIMER/SLEEP→TIMER.
This switching is possible at all times. If there is a change to the SLEEP mode while the power is OFF, the power will be switched ON, and, if there is a change to the TIMER mode while the power is ON, the power will be switched OFF.
(14) The time can be adjusted while the HOUR and MINUTE keys are pressed and held. If the key is pressed for 0.7 second or longer, the hour will change at 200 milliseconds and the minute at 150 milliseconds.

h. Description of the volume block

(1) IC925 (LC7535) for volume control is 22 steps; the level indication is in 11 stps.
(2) The volume value changes each 150 milliseconds when the key for volume adjustment is pressed and held for 700 milliseconds or longer.
(3) When the MUTE key is pressed, the level indication flashes in one-second cycles. The sound is muted at this time.
(4) The sound-muted condition can be canceled by pressing the MUTE, VOLUME or POWER key, If the volume was increased or reduced while the sound was muted, the volume level will be as after that increase or reduction.

i. Description of the function block

(1) IC924 (LC7821, for function selection) can select the following four functions: compact-disc player, tape deck, tuner or line.
(2) The compact-disc and tape deck PLAY and AUTO DUBBING keys operate as direct-access functions.

j. Description of the tape deck block

(1) Automatic reverse by logic control is possible for both tape deck A and tape deck B.
(2) Tape deck A is for playbak; this deck is AMSS operation applicable.
(3) Tape deck B is for recording or playback.
(4) Automatic tape dubbing at double speed is possible.

k. Description of the compact-disc player block

(1) A compact-disc player, with a two-disc tray and one pick-up
(2) Programmed play of as many as 30 tracks is possible.
(3) Direct-access play, by using the ten-key feature of the remote-control transmitter, is also possible.
(4) The unit has an editing function of track times (usually up to 15 tracks), and automatic dubbing from compact disc to tape is possible.

a. Description of the tape deck service modes

(1) Mode 1:
This mode is used in order to check the operation of the tape deck mechanisms.

(2) Mode 2:
This mode is used in order to check printed-circuit boards. As a service mode for verification, mode 1 only is used.

b. Use of the service mode (mode 1)

(1) Disconnect the power cord from its electrical outlet.

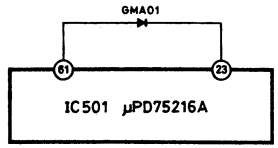

(2) Take out the three batteries.
(3) Connect a diode (GMA01, etc.) to pin 23 and pin 61 of IC501
(4) Connect the power cord to the electrical outlet.
(5) The unit will then be in the service mode.
(6) When the use of the service mode is finished, disconnect the power cord from its electrical outlet.
(7) Remove the diode connected between pin 23 pin 61 of IC501.

c. Service mode display indications

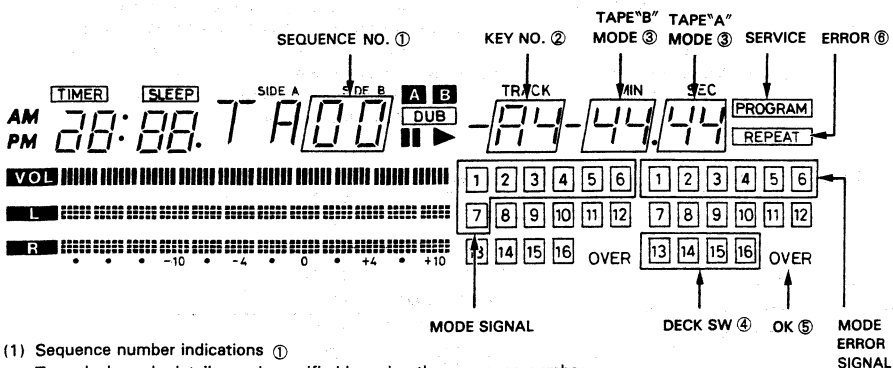

(1) Sequence number indications ①
Tape deck mode details can be verified by using the sequence number.

Sequence NO	MODE 1	Deck (s)	Sequence No.	MODE 1	Deck (s)
0	INITAL	A/B	7	FWD	B
1	REW	A	8	STOP	B
2	FWD	A	9	REC PAUSE	B
3	AMSS(FWD/FF)	A	10	STOP	B
4	– – –	A	11	HI–DUB	A/B
5	STOP	A	12	STOP	A/B
6	REW	B			

(2) Key number indications ②
Tape deck operation details can be verified by using the key number

KEY	F.FWD	FWD	STOP	REV	REW	REC
TAPE"A" KEY NO	A1	A2	A3	A4	A5	– – –
TAPE"B" KEY NO	B1	B2	B3	B4	B5	B6

(3) Tape deck A and B command code and condition code indications ③

- The mechanism can be verified to be operating normally when the command code and the condition code are in agreement.

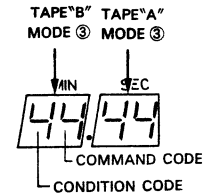

DECK MODE	FWD	REV	FFWD	REW	STOP	REC / PAUSE
COMMAND CODE	0	1	2	3	4	5
CONDITION CODE	0	1	2	3	4	5

- Command code and condition code indications during AMSS and dubbing

DECK MODE	AMSS / FWD	AMSS / REV	REC / FWD	REC / REV	NOM / DUB	HI / DUB	ERROR
COMMAND CODE	– – –	– – –	9	A	7	8	F
CONDITION CODE	6	7	9	A	9 / A	9 / A	F

(4) Tape deck switch indications ④

- The ON/OFF condition of tape deck A and tape deck B switches can be verified.

DISPLAY	13	14	15	16
SWITCH	A-CAST	B-CAST	REC-A	REC-B

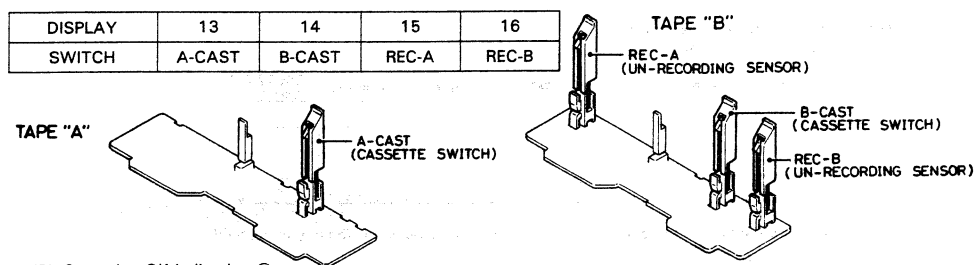

(5) Operation OK indication ⑤

- The word " OVER " is displayed in the service mode if the condition is normal and free of errors.

(6) Operation ERROR indication ⑥

- The word " REPEAT " is displayed in the service mode if there is an error.

(7) When the use of the service mode is finished, disconnect the power cord from its electrical outlet.
(8) Remove the diode connected between pin 23 pin61 of IC501.

TAPE DECK MECHANISM SWITCH P.C. BOARD

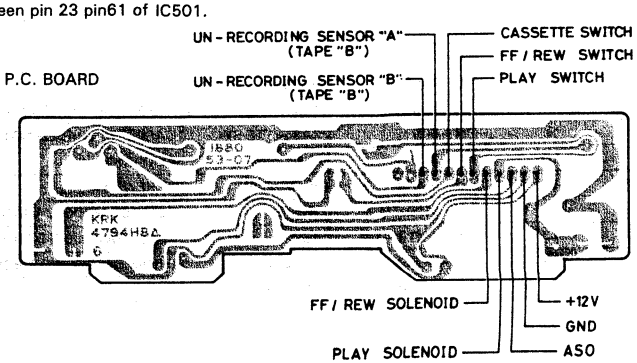

a. Tape deck A table of key inputs and mechanism operations

OPERATION MODE / KEY INPUT	STOP	PLAY ▶	PLAY ◀	▶▶	◀◀	AMSS ▶▶	AMSS ◀◀	DUBBING NOTE 1 ▶	DUBBING NOTE 1 ◀
STOP	–	STOP	STOP	STOP	STOP	STOP	STOP	STOP	STOP
PLAY ▶	PLAY ▶	–	PLAY ▶	PLAY ▶	PLAY ▶	PLAY ▶	PLAY ▶	–	–
PLAY ◀	PLAY ◀	PLAY ◀	–	PLAY ◀	PLAY ◀	PLAY ◀	PLAY ◀	–	–
▶▶	▶▶	AMSS ▶▶	AMSS ▶▶	–	▶▶	–	AMSS ▶▶	–	–
◀◀	◀◀	AMSS ◀◀	AMSS ◀◀	◀◀	–	AMSS ◀◀	–	–	–
DUBBING	DUBBING ▶	–	–	–	–	–	–	–	–
HIGH SPEED DUBBING	HIGH SPEED DUBBING ▶	–	–	–	–	–	–	–	–
TAPE END MODE									
⊼	–	STOP	STOP	STOP	STOP	STOP	STOP	STOP	STOP
⊃	–	PLAY ◀	STOP	STOP	STOP	STOP	STOP	DUBBING ◀	STOP
↻	–	PLAY ◀	PLAY▶	STOP	STOP	STOP	STOP	DUBBING ◀	STOP
LED									
▶		○				○Note 2	○Note 2	○	
◀			○			○Note 2	○Note 2		○

Note 1: Same for HIGH-speed dubbing; for the dubbing and HIGH-speed dubing key, I/O (DUB-IN), not in the above table, is not accepted when LOW level.

Note 2: The LED for the play mode prior to AMSS is illuminatd.

b. Description of inputs and operations

(1) Tape deck A input and IC626

PORT / KEY	STOP	PLAY▶	PLAY ◀	▶▶	◀◀	DUBBING	HIGH SPEED DUBBING
IN–1	○		○		○		
IN–2	○	○		○			
IN–3				○	○		○
IN–4						○	○

The ○ symbol indicates that the port level changes to LOW level when the key is pressed.

IC626 TC9312AN–078 I/O PORT PLAY BACK MECHANISM

INPUT LINE

PIN–NO	SYMBOL	NAME	COMMENT
3	CL	——	SYSTEM CLEAR
4	IN–1(1)	REV	
5	IN–2(2)	FWD	
6	IN–3(3)	FAST	
7	IN–4(4)	DUBBING	
8	IN–5(5)	AMSS	TUNE START SEARCH SIGNAL
9	IN–6(6)	CASSETTE SW	CASSETTE LOADED/NOT LOADED SWITCH
10	IN–7(7)	PLAY SW	PLAY SW
11	IN–8(8.9)	FF.REW SW	FF.REW SW
12	IN–9(10.11)	MODE	REVERSE MODE (3-VALUE INPUT)
13	IN–10(12–14)	ASO	TAPE TRAVEL DETECTION (AC)
14	I/O–1(15)	DUBBING IN	(FROM RECORDING MECHANISM)
15	I/O–2(16)	REC–IN	(〃)
16	I/O–3(17)	B–MOVE	(〃)

(2) AMSS function (IN-5) (IC626 pin 8)
The AMSS is canceled by a change to HIGH level, and the mode reverts to PLAY ▶ or PLAY ◀. This terminal accepts signals only during AMSS operation.

(3) Cassette-detection switch (IN-6) (pin 9)
No acceptance of IN-1 IN-4 key inputs during the OPEN condition, Acceptance of key inputs as a result of LOW level input; change to STOP mode if there is a change to HIGH level during operation.

(4) PLAY SW (IN-7) (pin 10)
There is a change to LOW level when the mechanism is in the PLAY or AMSS mode.

(5) FF/REW SW (IN-8) (pin 11)
There is a change to LOW level when the mechanism is in the ▶▶, ◀◀ or AMSS mode.

(6) Reverse mode function (IN-9) (pin 12)
HIGH level: ⊼ one-way mode
OPEN: ⊃ reverse, end stop
LOW level: ↻ endless play

(7) Tape-travel-detection function (IN-10) (pin 13) pulse input terminal.
When there is no pulse signal for 3 seconds or longer during playback or dubbing (one second or longer during any other mode), the unit considers that the end of the tape has been reached, and either stops tape travel or changes to the reversing operation.

(8) DUBBING IN (I/O-1)(pin 14)
Because the dubbing operation cannot be continued unless the HIGH level is not maintained, there is a cancellation of dubbing (STOP) if there is no HIGH level signal.
During the dubbing condition, no key input other than STOP is accepted.

(9) REC IN (I/O-2) (pin 15)
If there is HIGH level input to this terminal, there is a change from CONT to HIGH -level output during PLAY ◀ and PLAY ▶.

(10) B-MOVE (I/O-3) (pin 16)
When this terminal is HIGH level, there is no RELAY-OUT HIGH level output.

OUTPUT LINE

PIN-NO	SYMBOL	NAME	COMMENT
27	OUT–1	MOTOR	
26	OUT–2	SOLENOID A	
25	OUT–3	SOLENOID B	
24	OUT–4	CONT	
23	OUT–5	REV–OUT	LED
22	OUT–6	FWD–OUT	〃
21	OUT–7	DUB–OUT	(TO RECORD/PLAY MECHANISM)
20	OUT–8	RELAY OUT	〃
19	OUT–9	PLAY MUTE	(REVERSING OUTPUT)
18	OUT–10	HIGH SPEED	〃
17	I/O–4(11)	KEY	HIGH LEVEL WHEN KEY ACCEPTANCE NOT POSSIBLE.

c. Description of outputs and operations

(1) HIGH SPEED (OUT-10) (pin 18)
HIGH level output: motor speed low speed (reverse output)
LOW level output: motor speed high speed

(2) REV-OUT (OUT-5) (pin 23)
FWD-OUT (OUT-6) (pin 22)
The ▶ or ◀ LED illuminates.

(3) PLAY MUTE (OUT-9) (pin 19)
Outputs the playback MUTE signal (reverse output).

(4) DUB-OUT (OUT-7) (pin 21)
HIGH level output occurs when the DUBBING signal is received.
Cancelled by the STOP key.

(5) RELAY-OUT (OUT-8) (pin 20)
Pulses are output when, during the PLAY ◀ condition, the tape end is reached when the reverse mode is in the ⊃ mode. Note, however, that such pulses are not output when B-MOVE (I/O-3) (pin 16) is HIGH level.

(6) CONT (OUT-4) (pin 24)
HIGH-level pulses are output when, during PLAY ▶ or PLAY ◀, REC-IN (I/O-2) (pin 15) is HIGH level, or during DUBBING ▶, DUBBING ◀, or double-speed DUBBING ▶ or DUBBING ◀.

(7) KEY (I/O-4) (pin 17)
HIGH-level pulses are output during the mechanism transition.

d. Cancellation during AMSS operation

(1) Priority of STOP KEY
Has priority in each and every condition, except when KEY output is HIGH level.

(2) KEY is accepted only when KEY output is LOW level.

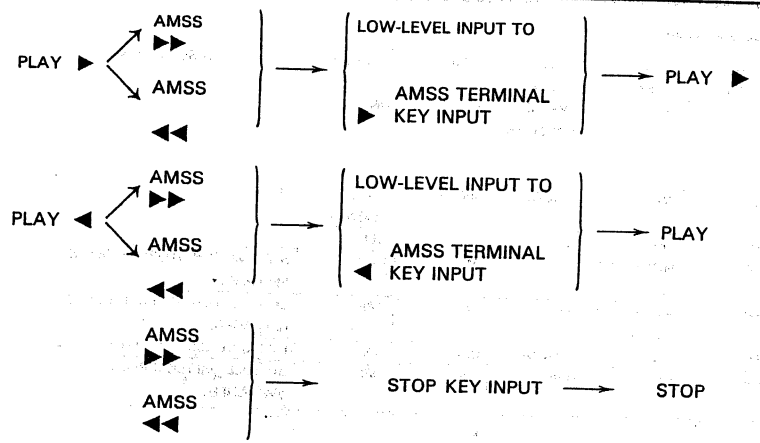

e. **Tape deck B table of key inputs and mechanism operations**

OPERATION MODE / KEY INPUT	STOP	PLAY ▶	PLAY ◀	▶▶	◀◀	REC ▶	REC ◀	REC PAUSE	REC ▶ PAUSE	REC ▶ PAUSE	DUBBING Note 1 ▶ Note 1	DUBBING Note 1 ◀ Note 1
STOP		STOP	STOP	STOP	STOP	STOP	STOP	STOP	STOP	STOP	STOP	STOP
PLAY ▶	PLAY ▶	–	PLAY ▶	PLAY ▶	PLAY ▶	–	–	REC ▶	REC ▶	–	–	–
PLAY ◀	PLAY ◀	PLAY ◀	–	PLAY ◀	PLAY ◀	–	–	REC ◀	–	REC ◀	–	–
▶▶	▶▶	▶▶	▶▶	–	▶▶	–	–	–	–	–	–	–
◀◀	◀◀	◀◀	◀◀	◀◀	–	–	–	–	–	–	–	–
REC	REC PAUSE	–	–	–	–	REC ▶ PAUSE	REC ◀ PAUSE	–	–	–	–	–
TAPE END MODE												
⇄	–	STOP	STOP	STOP	STOP	STOP	STOP	–	–	–	STOP	STOP
↺	–	PLAY◀	STOP	STOP	STOP	REC◀ Note 2	STOP	–	–	–	DUBBING ◀	STOP
⟲	–	PLAY◀	PLAY▶	STOP	STOP	REC◀ Note 2	STOP	–	–	–	DUBBING ◀	STOP
LED												
▶		○				○		○Note 3	○Note 3		○	
◀			○				○	○Note 3		○Note 3		○
REC						○	○	○	○	○	○	○

Note 1: Same for HIGH-speed dubbing.

Note 2: Changes to STOP if B side error un-recording sensor switch is OFF.

Note 3: Flashes at 500-msec. cycles: if both signals from the tab detection switch are LOW level, both flash; if only one, however, only the one at LOW level flashes; no change to the REC PAUSE mode if HIGH level,

f. Description of inputs and operations

(1) Tape deck B input and IC627

KEY / PORT	STOP	PLAY ▶	PLAY ◀	▶▶	◀◀	REC
IN–1	○		○		○	
IN–2	○	○		○		
IN–3				○	○	
IN–4						○

The ○ symbol indicates that the port level changes to LOW level when the key is pressed.

- If both IN-3 and IN-4 are pressed, there is a change to the double-speed dubbing mode at the AND of DUBBING IN (I/O

IC627 TC9312AN–079 I/O PORT RECORD/PLAY MECHANISM
INPUT LINE

PIN–NO	SYMBOL	NAME	COMMENT
3	CL	——	SYSTEM CLEAR
4	IN–1(1)	REV	
5	IN–2(2)	FWD	
6	IN–3(3)	FAST	
7	IN–4(4)	REC	
8	IN–5(5)	A–REC	UN–RECORDING SENSOR SW A
9	IN–6(6)	B–REC	UN–RECORDING SENSOR SW B
10	IN–7(7)	CASSETTE SW	CASSETTE LOADED/NOT LOADED SWITCH
11	IN–8(8.9)	TIMER	TIMER MODE (3-VALUE INPUT)
12	IN–9(10.11)	MODE	REVERSE MODE (3-VALUE INPUT)
13	IN–10(12–14)	ASO	TAPE TRAVEL DETECTION (AC)
14	I/O–1(15)	PLAY SW	PLAY SW
15	I/O–2(16)	FF,REW,SW	FF–REW SW
16	I/O–3(17)	DUBBING IN	(FROM PLAY MECHANISM)

(2) Record and dubbing inhibit function
IN-5... A-side tab detection
Low level: REC ▶ and dubbing possible
IN-6... B-side tab detection
LOW level: REC ◀ possible

(3) Cassette-detection switch (IN-7) (pin 10)
IN–1 IN-4 KEY inputs are not accepted during the OPEN condition. KEY inputs are accepted as a result of LOW-level input. There is a change to STOP if there is HIGH-level input during operation.

(4) Timer mode function (IN-8) (pin 11)
When there is Vdd, the following occur in accordance with the condition of this board.
(There is a change to each operation after a two-second period of initialization.)
HIGH levdl: PLAY mode (PLAY ▶)
OPEN: OFF mode (STOP)
LOW level: REC mode (REC ▶)

(5) Reverse mode function (IN-9) (pin 12)
HIGH level: ⇄ one-way mode
OPEN: ↺ reverse, end stop
LOW level ⟲ endless
(Timer recordings and dubbing recordings always begin with REC ▶ .)

UN–RECORDING SWITCH		REVERSE MODE	
A-SIDE	B-SIDE	⇄	↺ ⟲
ON	ON	REC ▶→STOP	REC ▶→REC ◀
ON	OFF	REC ▶→STOP	REC ▶→STOP
OFF	ON orOFF	STOP	STOP

DECK DESCRIPTION

Tape-travel-detection function (IN-10) (pin 13) pulse input terminal.
When there is no pulse signal for 3 seconds or longer during playback, recording or dubbing (one second or longer during any other mode), the unit considers that the end of the tape has been reached, and either stops tape travel or changes to the reversing operation.

) PLAY SW (IO-1) (pin 14)
Becomes LOW level when the mechanism is in the PLAY mode.

) FF/REW SW (I/O-2) (pin 15)
Becomes LOW level when the mechanism is in the ▶▶ or ◀◀ mode.

) DUBBING IN (I/O-3) (pin 16)
Because the dubbing operation cannot be continued unless the HIGH level is not maintained, there is a cancellation of dubbing if there is no HIGH level signal.
During the dubbing condition, no key input other than STOP is accepted.

g. Description of outputs and operations
(1) REC-OUT (OUT-4)
The REC LED illuminates.
(2) REV-OUT (OUT-5) (pin 23)
FWD-OUT (OUT-6) (pin 22)
The ▶ or ◀ LED illuminates.
(3) DUB-OUT (OUT-7) (pin 21)
HIGH level output occurs when the DUBBING signal is received.
Canceled by the STOP key.
(4) KEY (OUT-8) (pin 20)
HIGH-level pulses are output during the mechanism transition.
(5) PLAY MUTE (OUT-9) (pin 19)
Outputs the playback MUTE signal (reverse output).
(6) REC MUTE (OUT-10) (pin 18)
Outputs the playback MUTE signal (reverse output).
(7) HIGH SPEED (I/O-4) (pin 17)
HIGH level output: motor speed low speed,

OUTPUT LINE

PIN-NO	SYMBOL	NAME	COMMENT
27	OUT-1	MOTOR	
26	OUT-2	SOLENOID A	
25	OUT-3	SOLENOID B	
24	OUT-4	REC-OUT	
23	OUT-5	REV-OUT	MODE OUTPUT
22	OUT-6	FWD-OUT	
21	OUT-7	DUBBING OUT	(FROM PLAY MECHANISM)
20	OUT-8	KEY	KEY IS REJECT ONLY "H" OUTPUT
19	OUT-9	PLAY MUTE	(REVERSE OUTPUT)
18	OUT-10	REC MUTE	(REVERSE OUTPUT)
17	I/O-4(11)	HIGH SPEED	

SCRIPTION OF THE COMPACT-DISC PLAYER SERVICE MODE

a. Setting the compact-disc player service mode

- The compact-disc player service mode is used in order to check the CD SERVO circuit.

(1) Disconnct the power cord from its electrical outlet.
(2) Take out the three batteries.
(3) Connect a diode (GMA01, etc.) to pin 23 and pin 60 of IC501.
(4) Connect the power cord to the electrical outlet.
(5) The unit will then be in the service mode.
(6) When the use of the service mode is finished, disconnect the power cord from its electrical outlet.
(7) Remove the diode connected between pin 23 pin 60 of IC501

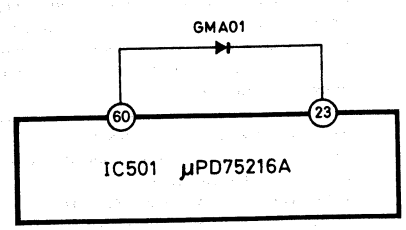

DESCRIPTION OF THE COMPACT-DISC PLAYER SERVICE MODE

b. Description of service mode operation

KEY INPUT	FOCUS SERVO	TRAKING COIL	SLED SERVO	CLV SERVO	MUTE	LASER	DESCRIPTION
PROGRAM (MEMORY)	SERVO ON AFTER FOCUS ADJUSTMENT	OFF	OFF	S MODE (ROUGH SERVO)	ON	ON	
REPEAT	NO CHANGE	ON	ON	A MODE	OFF	NO CHANGE	PLAY
STOP	OFF	OFF	OFF	OFF	ON	OFF	
FWD SEARCH	OFF	OFF	MOVES TO Disc B	OFF	ON	OFF	SLED MOTOR STOPS IF KEY IS RELEASED.
BACK SEARCH	OFF	OFF	MOVES TO Disc A	OFF	ON	OFF	SLED MOTOR STOPS IF KEY IS RELEASED.
PLAY	ON	ON	ON	A MODE	OFF	ON	DE-EMPHASIS IS SWITCHED ON.
DISC A/B	OFF	OFF	OFF	OFF	ON	OFF	SPINDLE DRIVER'S RELAY IS SWITCHED.

c. Setting the key service mode

- This is used for key checking of the display printed-circuit board (which includes the IC501 microcomputer).

(1) Disconnect the power cord from its electrical outlet.
(2) Take out the three batteries.
(3) Connect a diode (GMA01, etc.) to pin 24 and pin 60 of IC501.
(4) Check to be sure that the clock display is 12:00 midnight. (Check to be sure that the key service mode is in effect.)
(5) When the use of the service mode is finished, disconnect the power cord from its electrical outlet.
(6) Remove the diode connected between pin 24 pin 60 of IC501.

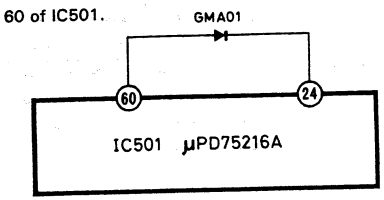

d. Key service mode display indications

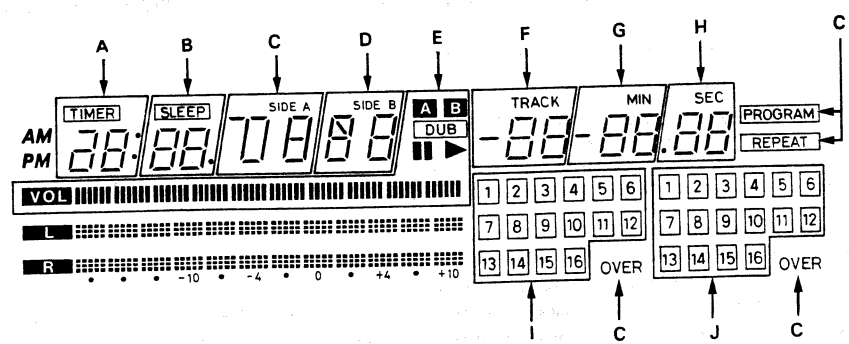

e. **KEY switch operation buttons**

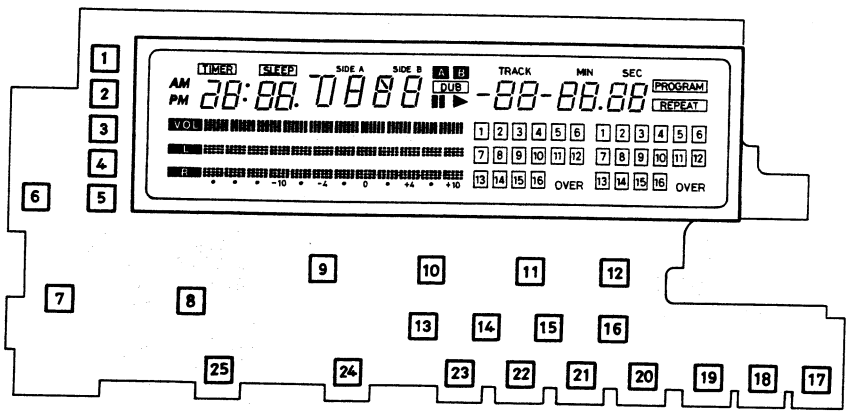

f. **Key service mode display indications**

The key service mode display indications can be checked by pressing the KEY switch.

KEY No.	DISPLAY
1	Area A illuminates
2	B 〃
3	C 〃
4	D 〃
5	E 〃
6	F 〃
7	G 〃
8	H 〃
9	I 〃
10	J 〃
11	All areas illuminate.
12	All areas go out illuminate
13	1, 3, 5, 7, 9, 11, 13, and 15 of J area illuminate.
14	2, 4, 6, 8, 10, 12, 14, and 16 of J area illuminate.
15	" 88 " of area H is displayed.

KEY No.	DISPLAY
16	" 77 " of area H is displayed.
17	bb
18	AA
19	99
20	12
21	13
22	14
23	15
24	16
25	17
–	Display changes when the remote-control transmitter is used.

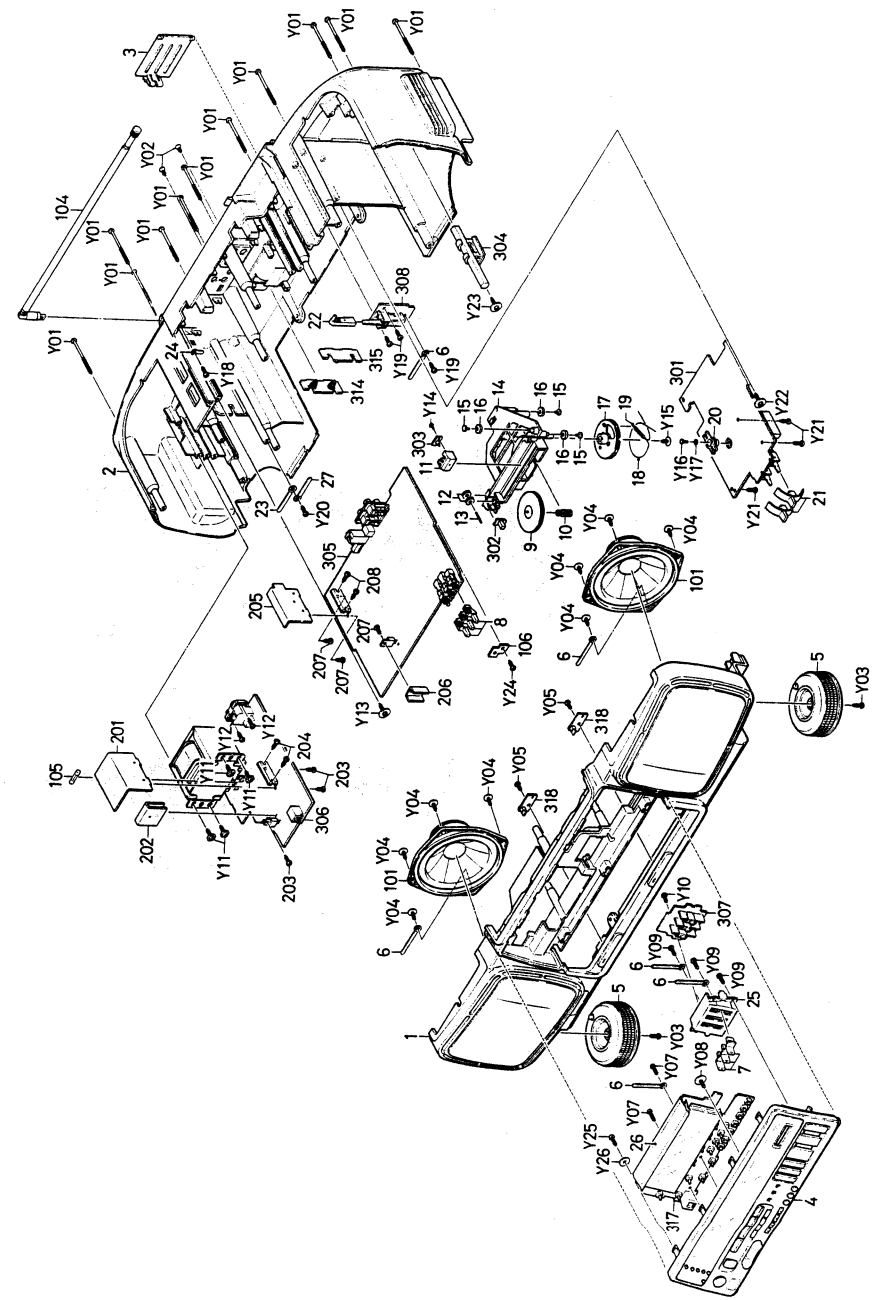

EXPLODED VIEW (CABINET & CHASSIS ②)

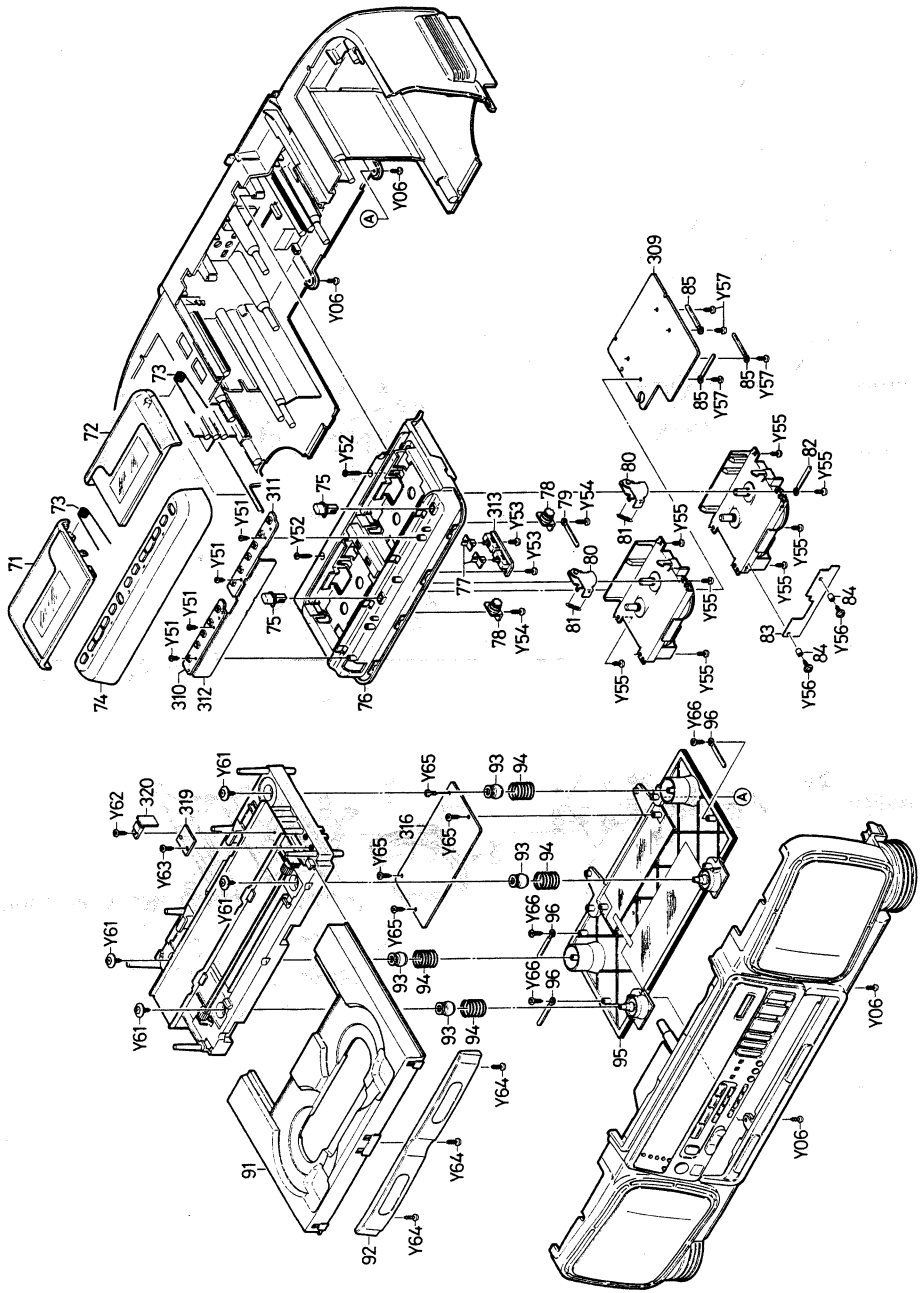

EXPLODED VIEW (CABINET & CHASSIS ③)

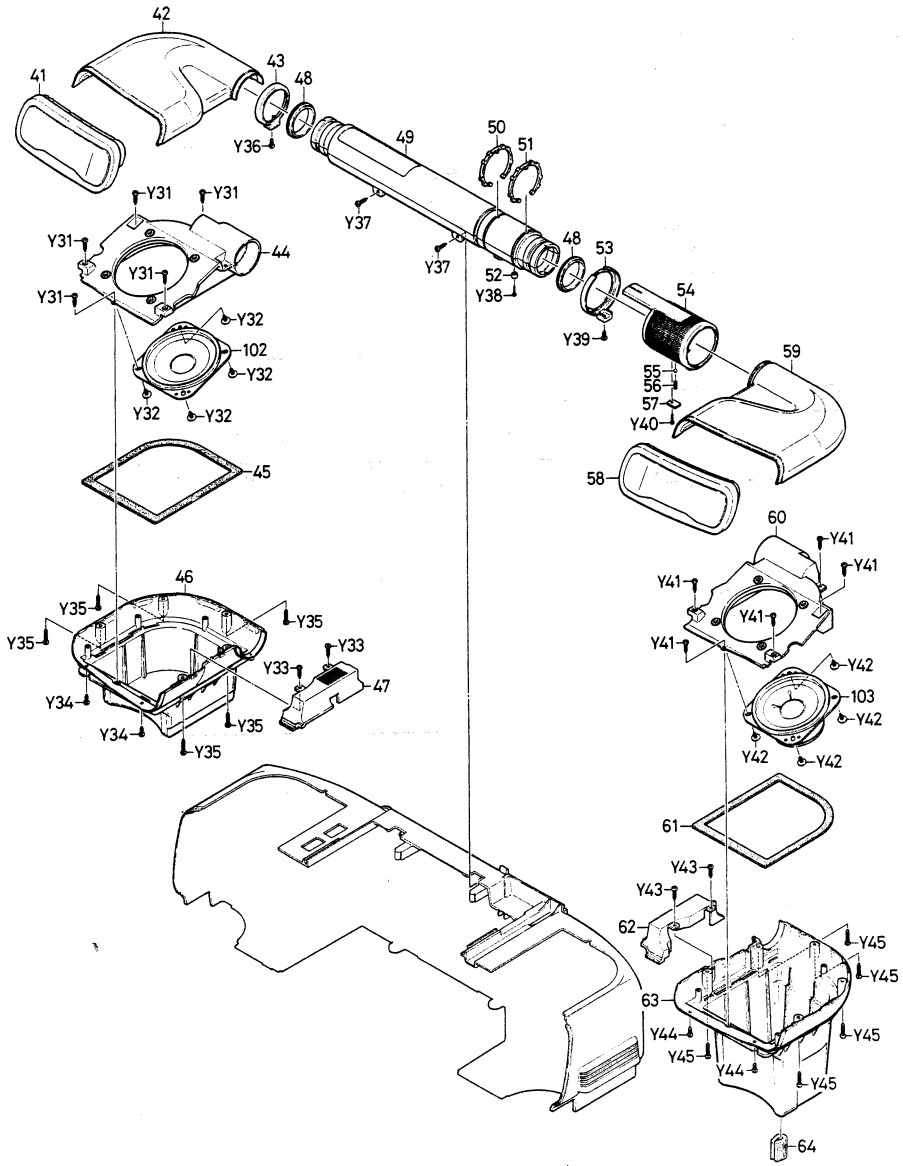

PRODUCT SAFETY NOTICE

Each precaution in this manual should be followed during servicing. Components identified with the IEC symbol ⚠ in the parts list and the schematic diagram designate components in which safety can be of special significance. When replacing a component identified with ⚠, use only the replacement parts designated, or parts with the same ratings of resistance, wattage or voltage that are designated in the parts list in this manual.
Leakage-current or resistance measurements must be made to determine that exposed parts are acceptably insulated from the supply circuit before returning the product to the customer.

CAUTION : Regular type resistors and capacitors are not listed. To know those values, refer to the schematic diagram.

PACKING & ACCESSORIES

Ref. No.	Part No.	Description
	614 214 1113	INNER CARTON (EUROPE)
	614 213 7093	INNER CARTON (ITALY)
	614 205 6417	PAD, TOP
	614 205 6424	PAD, BOTTOM
	614 208 3468	POLY COVER, SET, 1000X500MM
	614 214 1144	INSTRUCTION MANUAL (EUROPE)
	614 213 7109	INSTRUCTION MANUAL (ITALY)
	614 186 1067	NOTICE (EUROPE)
	614 191 3681	LABEL, LASER PRODUCT
	614 208 5257	LABEL, CAUTION, BATTERY
	614 208 5271	LABEL, SAFETY
	⚠ 614 023 1762	POWER CORD, AC
or	⚠ 614 023 1779	POWER CORD, AC

CABINET & CHASSIS

Ref. No.	Part No.	Description
1	614 203 5801	CABINET ASSY, FRONT
2	614 213 7130	BACK LID ASSY (ITALY)
	614 213 6478	BACK LID ASSY (EUROPE)
3	614 198 9976	BATTERY LID
4	614 213 7123	FRONT PANEL ASSY, OPERATION
5	614 203 8406	STAND ASSY
6	614 129 9136	LUG, CABINET LEAD FIX
7	614 203 4453	SLIDE KNOB, GRAPHIC EQUALIZER
8	614 203 5955	PUSH BUTTON, SURROUND/ TAPE/DOLBY NR
9	614 203 4460	ROTARY KNOB, TUNING
10	614 203 9144	SHAFT, TUNING
11	614 203 9083	POINTER
12	614 135 6198	PULLEY, DIAL CORD
13	614 203 9151	SHAFT, PULLEY
14	614 203 8901	BRACKET, TUNER P.C.BOARD
15	614 203 9076	PIN, PULLEY
16	614 135 5702	PULLEY, DIAL CORD
17	614 203 9090	DRUM, TUNING CAPACITOR
18	614 203 9595	ROPE, DIAL CORD, 0.3MM
19	614 146 8778	SPRING COIL, PULLEY
20	614 120 3782	BRACKET CAPACITOR, DRUM
21	614 203 4446	LEVER KNOB, FM MODE/BAND
22	614 203 9120	LEVER, EBSS CHANGE
23	614 129 9136	LUG, LEAD MTG.
24	614 051 9785	LUG, ROD ANTENNA
25	614 203 8949	BASE, GRAPHIC EQUALIZER
26	614 204 9631	SHIELD PLATE, FL DISPLAY SHIELD
27	614 130 0382	LUG, DUCT SPEAKER
41	614 208 5318	ESCUTCHEON ASSY, EBSS SPEAKER (L)
42	614 206 1404	COVER, SPEAKER DUCT (L)
43	614 203 8833	ESCUTCHEON, PIPE (L)
44	614 203 6266	ESCUTCHEON, SPEAKER FIX (L)
45	614 203 9014	SPACER, DUCT GASKET
46	614 203 2107	BRACKET, SPEAKER DUCT (L)
47	614 203 8642	COVER, SPEAKER SIDE (L)
48	614 203 9007	SPACER, PIPE GASKET
49	614 206 1299	PIPE ASSY
50	614 203 9106	RING, ROTARY KNOB (L)
51	614 203 9625	RING, ROTARY KNOB (M)
52	614 205 9654	SPACER, EBSS R KNOB
53	614 203 8840	ESCUTCHEON, ROTARY KNOB (R)
54	614 208 5530	ROTARY KNOB, EBSS ACCELEATOR
55	614 118 5811	STEEL BALL, EBSS R KNOB
56	614 205 9661	SPRING, COMP, EBSS R KNOB
57	614 203 2459	BRACKET, EBSS R KNOB
58	614 208 5301	ESCUTCHEON ASSY, EBSS SPEAKER (R)
59	614 206 1398	COVER, SPEAKER DUCT (R)
60	614 203 6259	ESCUTCHEON, SPEAKER FIX (R)
61	614 203 9014	SPACER, DUCT GASKET
62	614 203 8635	COVER, SPEAKER SIDE (R)
63	614 203 2091	BRACKET, SPEAKER DUCT (R)
64	614 204 8412	CUSHION, EBSS LEAD
71	614 203 8352	COVER ASSY, BRACKET LID (L), TAPE "A"
72	614 203 8369	COVER ASSY, BRACKET LID (R), TAPE "B"
73	614 203 9182	SPRING WIRE, TOP LID
74	614 206 1275	FRONT PANEL ASSY, CASSETTE
75	614 203 8888	PUSH BUTTON, EJECT
76	614 203 8918	BRACKET, CASSETTE FIX
77	614 203 5894	SLIDE KNOB, REVERSE MODE/ TAPE "B" TIMER STANDBY
78	614 069 0385	GEAR ASSY, TOP LID
79	614 129 9136	LUG, TAPE MECHANISM LEAD
80	614 203 8475	BRACKET ASSY, EJECT
81	614 203 9175	SPRING COIL, EJECT LEVER
82	614 129 9136	LUG, TAPE MECHANISM LEAD
83	614 207 2196	COVER, TAPE "B" MECHANISM
84	614 207 4190	SPACER, TAPE "B" MECHANISM
85	614 129 9136	LUG, TAPE MECHANISM LEAD
91	614 207 7276	SLIDE ASSY, CD TRAY
92	614 203 3883	ESCUTCHEON, CD TRAY
93	614 213 7888	RUBBER CUSHION, FLOATING
94	614 204 0027	SPRING COIL, FLOATING
95	614 205 6813	BOTTOM LID ASSY, CD MECHANISM
96	614 129 9136	LUG, TAPE MECHANISM LEAD
	614 205 6578	ADHESIVE SHEET, COVER, DUCT TOP
	614 125 6443	CUSHION, 15X25X3MM, LEAD MTG.
	412 005 2307	SPECIAL SCREW, FLOATING
	614 207 6880	SHEET, TUNER BRACKET
	614 207 1564	COVER, CD MECHANISM BOTTOM (REF.NO.95 MTG.)
	614 130 0382	LUG, LEAD MTG.

FIXING PARTS

Ref. No.	Part No.	Description
Y01	411 026 6004	SCR S-TPG PAN 3X45MM, BACK LID
Y02	411 022 2505	SCR S-TPG FLT 2.6X8MM, LINE SOCKET
	411 022 2505	SCR S-TPG FLT 2.6X8MM, SURROUND SPEAKER SOCKET
Y03	411 021 4005	SCR S-TPG BIN 3X12MM, STAND

Ref. No.	Part No.	Description
Y04	411 020 8905	SCR S-TPG BRZ + FLG 3X10MM, CABINET/SPEAKER
Y05	411 021 5705	SCR S-TPG BIN 3X6MM, CD OPERATION P.C.B
Y06	411 023 4201	SCR S-TPG PAN 3X10MM, BOTTOM LID/CABINET BACK
Y07	411 021 1806	SCR S-TPG BIN 2.6X10MM, FRONT (BOTTOM)/FL DISPLAY P.C.B
Y08	412 003 1708	SPECIAL SCREW, FRONT (R)/ FL DISPLAY P.C.B
Y09	411 021 3503	SCR S-TPG BIN 3X10MM, FRONT PANEL/GRAPHIC EQUALIZER P.C.B
Y10	411 021 3503	SCR S-TPG BIN 3X10MM, GRAPHIC EQUALIZER P.C.B
Y11	411 020 8905	SCR S-TPG BRZ + FLG 3X10MM, POWER TRANSFORMER
Y12	411 021 3503	SCR S-TPG BIN 3X10MM, AC POWER SOCKET
Y13	412 005 2307	SPECIAL SCREW, 3X10MM, AMP. P.C.B (L)
Y14	411 022 7807	SCR S-TPG PAN 2X6MM, POINTER
Y15	411 021 4302	SCR S-TPG BIN 3X14MM, DRUM
Y16	411 098 6902	BOLT HEX C-SCT 2.6X6MM, TUNING CAPACITOR
Y17	411 085 1507	WASHER OUT TW 2.6X5.8X0.32MM, BRACKET CAPACITOR
Y18	411 021 3503	SCR S-TPG BIN 3X10MM, ROD ANTENNA
Y19	411 021 6405	SCR S-TPG BIN 3X8MM, EBSS LEVER SWITCH
Y20	411 021 3503	SCR S-TPG BIN 3X10MM, POWER SIDE LEAD
Y21	411 021 3503	SCR S-TPG BIN 3X10MM, TUNER P.C.B/BRACKET
Y22	412 005 2307	SPECIAL SCREW, 3X10MM, TUNER P.C.B (R)
Y23	412 005 2307	SPECIAL SCREW, 3X10MM, AM ANTENNA COIL
Y24	411 020 8905	SCR S-TPG BRZ + FLG 3X10MM, AMP. P.C.B (R)
Y25	411 021 3503	SCR S-TPG BIN 3X10MM, FRONT (L)/FL DISPLAY P.C.B
Y26	411 092 3709	WASHER Z 3X13X1MM, FRONT (L)/FL DISPLAY P.C.B
Y31	411 021 4005	SCR S-TPG BIN 3X12MM, COVER BRACKET (L)
Y32	411 020 8905	SCR S-TPG BRZ + FLG 3X10MM, BASS CHAMBER SPEAKER
Y33	411 021 4005	SCR S-TPG BIN 3X12MM, SIDE COVER (L)
Y34	411 021 6603	SCR S-TPG BIN 3X8MM, SPEAKER PANEL (L)
Y35	411 021 4104	SCR S-TPG BIN 3X12MM, ESCUTCHEON BRACKET (L)
Y36	411 021 6603	SCR S-TPG BIN 3X8MM, RING BRACKET (L)
Y37	411 021 3503	SCR S-TPG BIN 3X10MM, PIPE
Y38	411 125 3409	SCR S-TPG PAN + FLG 2X12MM, EBSS SPRING
Y39	411 021 6603	SCR S-TPG BIN 3X8MM, RING ROTARY
Y40	411 125 3409	SCR S-TPG PAN + FLG 2X12MM, EBSS SPRING
Y41	411 021 4005	SCR S-TPG BIN 3X12MM, COVER BRACKET (R)
Y42	411 020 8905	SCR S-TPG BRZ + FLG 3X10MM, HORN SYSTEM SPEAKER
Y43	411 021 4005	SCR S-TPG BIN 3X12MM, SIDE COVER (R)
Y44	411 021 6603	SCR S-TPG BIN 3X8MM, SPEAKER PANEL (R)
Y45	411 021 4104	SCR S-TPG BIN 3X12MM, ESCUTCHEON BRACKET (R)
Y51	411 023 1002	SCR S-TPG PAN 2.6X10MM, TAPE MECHANISM/OPERATION SWITCH
Y52	411 023 6403	SCR S-TPG PAN 3X20MM, TAPE MECHANISM/BACK LID
Y53	411 021 3503	SCR S-TPG BIN 3X10MM, REVERSE MODE/TAPE "B" TIMER STANDBY
Y54	411 021 3503	SCR S-TPG BIN 3X10MM, CASSETTE DAMPER
Y55	411 021 3503	SCR S-TPG BIN 3X10MM, CASSETTE MECHANISM
Y56	411 024 3807	SCR S-TPG PAN + FLG 2X8MM, TAPE MECHANISM COVER
Y57	411 021 3503	SCR S-TPG BIN 3X10MM, MECHANISM CONTROL
Y61	412 005 2307	SPECIAL SCREW, CD MECHANISM
Y62	411 021 6405	SCR S-TPG BIN 3X8MM, TRANSISTOR P.C.B
Y63	411 021 6405	SCR S-TPG BIN 3X8MM, CONNECTOR P.C.B
Y64	411 021 3503	SCR S-TPG BIN 3X10MM, CD TRAY ESCUTCHEON
Y65	411 021 6405	SCR S-TPG BIN 3X8MM, BOTTOM LID/CD P.C.B
Y66	411 021 3503	SCR S-TPG BIN 3X10MM, LUG MTG.

ELECTRICAL PARTS

Ref. No.	Part No.	Description
101	614 203 6440	SPEAKER, STEREO
102	614 203 6464	SPEAKER, BASS CHAMBER, PASSIVE RADIATOR
103	614 203 6457	SPEAKER, HORN SYSTEM, WOOFER
104	614 204 4117	ROD ANTENNA
or	614 206 5310	ROD ANTENNA
105	⚠ 423 007 6408	FUSE 250V 6.3A
106	614 214 0550	P.C BOARD AMP./ TUNER P.C.B FIX.
	614 019 7648	SOCKET, ROD ANTENNA
T901	⚠ 614 213 4610	POWER TRANSFORMER (ITALY)
	⚠ 614 211 9075	POWER TRANSFORMER (EUROPE)
CN3	614 203 8062	SOCKET, 5P, RECORD/PLAY HEAD
CN4	614 203 8048	SOCKET, 3P, PLAY HEAD
CN5	614 207 6910	SOCKET, 10P, TAPE MECHANISM/ AMP. P.C.BOARD
CN6	614 203 8055	SOCKET, 2P, ERASE HEAD
CN9	614 207 9560	SOCKET, 7P, POWER
CN23	614 203 8079	SOCKET, 2P, 3D SPEAKER
CN24	614 207 9591	SOCKET, 4P, STEREO SPEAKER
CN33	614 207 6934	SOCKET, 8P, TAPE MECHANISM "A"
CN36	614 207 6927	SOCKET, 10P, TAPE MECHANISM "B"

TUNER P.C.BOARD ASSY

Ref. No.	Part No.	Description
301	614 214 0819	P.C BOARD ASSY, TUNER
	614 130 0238	LUG, ANTENNA
VC/VCT	614 007 6493	TUNING CAPACITOR
T101	614 030 3667	I.F.T, FM
T103	614 030 4237	I.F.T, FM
T104	614 030 4046	I.F.T, AM
L1	614 034 6756	V.H.F COIL, FM
L2	614 035 0395	V.H.F COIL, FM
L5	614 203 7942	ANTENNA COIL, AM
L6	614 034 1249	O.S.C COIL, AM
L8	614 028 6625	FILTER
L9	614 028 6625	FILTER
L11	614 032 5775	ANTENNA COIL, FM

Ref. No.	Part No.	Description
2	614 029 3340	MX COIL
3	614 029 3340	MX COIL
4	614 029 3333	MX COIL
5	614 029 3333	MX COIL
1	614 030 5074	I.F FILTER, RED, FM
	614 030 5081	I.F FILTER, BLUE, FM
	614 030 5098	I.F FILTER, ORANGE, FM
	614 030 5104	I.F FILTER, BROWN, FM
	614 030 5111	I.F FILTER, WHITE, FM
02	614 030 5074	I.F FILTER, RED, FM
	614 030 5081	I.F FILTER, BLUE, FM
	614 030 5098	I.F FILTER, ORANGE, FM
	614 030 5104	I.F FILTER, BROWN, FM
	614 030 5111	I.F FILTER, WHITE, FM
03	614 030 7597	I.F FILTER, AM
	614 206 2005	SWITCH, LEVER, BAND
	614 206 2005	SWITCH, LEVER, FM MODE
R201	614 203 6594	SEMI-FIXED RESISTOR, 10K OHM
	614 035 5932	SOCKET, 2P
1	614 035 5970	SOCKET, 6P
2	614 035 5932	SOCKET, 2P
	614 017 6964	TERMINAL BOARD
	614 123 1808	TERMINAL
1	409 174 7509	IC LA1188-A
101	409 002 6803	IC BA4236L
201	409 002 1501	IC BA1332L
	405 004 4601	TR 2SA608-F-SPA
01	405 020 1202	TR 2SC930-D-SPA
91	405 004 4601	TR 2SA608-F-SPA
92	405 011 8609	TR 2SC1740S-S
	405 017 9709	TR 2SC3330-U
	407 007 9904	DIODE GMA01
	407 012 4406	DIODE 1SS133
1	407 005 4505	DIODE DS442X
	407 013 7109	DIODE 1S2473
20	407 000 8003	VARACTOR DI 1S553T
201	407 005 4505	DIODE DS442X
	407 013 7109	DIODE 1S2473
204	403 080 5000	POLYPRO 1000P J 100V

M STEREO LED P.C.BOARD ASSY

Ref. No.	Part No.	Description
02	614 214 0826	P.C BOARD ASSY, FM STEREO LED
	614 208 4021	SPACER, FM STEREO LED
250	407 029 3607	LED SLP-183B-09, FM STEREO

UNER LED POINTER P.C.BOARD ASSY

Ref. No.	Part No.	Description
03	614 214 0833	P.C BOARD ASSY, TUNER LED, POINTER
251	407 027 1605	LED SLP-144B, TUNER LED, POINTER

M ANTENNA COIL P.C.BOARD ASSY

Ref. No.	Part No.	Description
304	614 214 0840	P.C BOARD ASSY, AM ANTENNA COIL
7	614 032 8691	ANTENNA COIL ASSY

AMP. P.C.BOARD ASSY

Ref. No.	Part No.	Description
305	614 214 0468	P.C.BOARD ASSY, AMP. (ITALY)
	614 213 7901	P.C BOARD ASSY, AMP. (EUROPE)
	614 020 4889	SOCKET, EXT. MIC
	614 203 6853	SOCKET, LINE IN/LINE OUT
	614 035 7769	SOCKET, SURROUND
	⚠ 614 213 7871	HEAT SINK (REF.NO.205)
	⚠ 614 121 5891	HEAT SINK (REF.NO.206)
	411 021 5705	SCR S-TPG BIN 3X6MM (REF.NO.207)
	411 021 4005	SCR S-TPG BIN 3X12MM (REF.NO.208)
ICP	⚠ 614 002 3282	IC-PROTECTOR ICP-F20
L527	614 028 4218	FILTER
or	614 028 4799	FILTER
L571	614 034 1423	O.S.C COIL
L721	614 205 7506	CHOKE COIL
L722	614 205 7490	CHOKE COIL
L723	614 029 3883	MX COIL
L724	614 027 8781	CHOKE COIL
L725	614 215 7923	INDUCTOR, FERITE (EUROPE)
L726	614 215 7923	INDUCTOR, FERITE (EUROPE)
L727	614 215 7923	INDUCTOR, FERITE (EUROPE)
L821	614 205 7506	CHOKE COIL
L822	614 205 7490	CHOKE COIL
L823	614 029 3883	MX COIL
L824	614 027 8781	CHOKE COIL
L825	614 215 7923	INDUCTOR, FERITE (EUROPE)
L826	614 215 7923	INDUCTOR, FERITE (EUROPE)
L827	614 215 7923	INDUCTOR, FERITE (EUROPE)
L923	614 028 6793	FILTER
L926	614 215 7923	INDUCTOR, FERITE (EUROPE)
L927	614 215 7923	INDUCTOR, FERITE (EUROPE)
L928	614 215 7923	INDUCTOR, FERITE (EUROPE)
L929	614 215 7923	INDUCTOR, FERITE (EUROPE)
S901	614 024 0849	SWITCH, TAPE
S902	614 019 1813	SWITCH, BEAT CANCEL
S905	614 024 0849	SWITCH, SURROUND
S906	614 023 9683	SWITCH, DOLBY NR
SVR721	614 203 6617	SEMI-FIXED RESISTOR, 22K OHM
SVR722	614 203 6617	SEMI-FIXED RESISTOR, 22K OHM
SVR723	614 203 6594	SEMI-FIXED RESISTOR, 10K OHM
SVR724	614 203 6594	SEMI-FIXED RESISTOR, 10K OHM
SVR725	614 203 6655	SEMI-FIXED RESISTOR, 100K OHM
SVR821	614 203 6617	SEMI-FIXED RESISTOR, 22K OHM
SVR822	614 203 6617	SEMI-FIXED RESISTOR, 22K OHM
SVR823	614 203 6594	SEMI-FIXED RESISTOR, 10K OHM
SVR824	614 203 6594	SEMI-FIXED RESISTOR, 10K OHM
SVR825	614 203 6655	SEMI-FIXED RESISTOR, 100K OHM
SVR921	614 203 6594	SEMI-FIXED RESISTOR, 10K OHM
CN1	614 035 4966	SOCKET, 7P
CN3	614 017 2560	PLUG, 5P, TAPE "A"
CN4	614 017 2546	PLUG, 3P, TAPE "B"
CN5	614 017 2614	PLUG, 10P, TAPE MECHANISM
CN6	614 017 2539	PLUG, 2P, TAPE "B"
CN7	614 017 2577	PLUG, 6P, CD MAIN P.C.BOARD
CN8	614 017 2607	PLUG, 9P, DISPLAY P.C.BOARD
CN9	614 017 2584	PLUG, 7P, POWER SUPPLY
CN10	614 017 2140	PLUG, 7P, POWER SUPPLY
CN11	614 207 9584	SOCKET, 7P, GRAPHIC EQUALIZER
CN12	614 035 4911	SOCKET, 2P
CN13	614 035 4928	SOCKET, 3P
CN14	614 020 1222	SOCKET, 3P, DIPMATE
CN15	614 020 1222	SOCKET, 3P
CN16	614 020 1253	SOCKET, 6P
IC922	⚠ 409 017 9707	IC LA4508
IC923	409 002 4700	IC BA3416BL
IC924	409 109 5105	IC LC7821
IC925	409 118 0504	IC LC7535
IC926	409 018 4503	IC LA6458DS
IC927	409 119 9803	IC CXA1101P
IC930	409 020 6908	IC LC4011B
Q571	405 011 8609	TR 2SC1740S-S
or	405 019 3705	TR 2SC536-G-AUD-SPA
Q572	405 011 8609	TR 2SC1740S-S

Ref. No.	Part No.	Description
Q572	405 019 3705	TR 2SC536-G-AUD-SPA
Q573	405 011 8609	TR 2SC1740S-S
or	405 019 3705	TR 2SC536-G-AUD-SPA
Q574	405 001 7704	TR 2SA1016-F
Q575	405 011 8609	TR 2SC1740S-S
or	405 019 3705	TR 2SC536-G-AUD-SPA
Q577	405 013 7006	TR 2SC2274-F
Q578	405 001 7704	TR 2SA1016-F
Q579	405 011 8609	TR 2SC1740S-S
or	405 019 3705	TR 2SC536-G-AUD-SPA
Q680	405 011 8609	TR 2SC1740S-S
or	405 019 3705	TR 2SC536-G-AUD-SPA
Q681	405 011 8609	TR 2SC1740S-S
or	405 019 3705	TR 2SC536-G-AUD-SPA
Q682	405 011 8609	TR 2SC1740S-S
or	405 019 3705	TR 2SC536-G-AUD-SPA
Q683	405 011 8609	TR 2SC1740S-S
or	405 019 3705	TR 2SC536-G-AUD-SPA
Q721	405 061 1100	TR 2SC536-F2-AUD-SPA
or	405 011 8609	TR 2SC1740S-S
or	405 019 3705	TR 2SC536-G-AUD-SPA
Q722	405 011 8609	TR 2SC1740S-S
or	405 019 3705	TR 2SC536-G-AUD-SPA
Q723	405 061 1100	TR 2SC536-F2-AUD-SPA
or	405 011 8609	TR 2SC1740S-S
or	405 019 3705	TR 2SC536-G-AUD-SPA
Q724	405 061 1100	TR 2SC536-F2-AUD-SPA
or	405 011 8609	TR 2SC1740S-S
or	405 019 3705	TR 2SC536-G-AUD-SPA
Q725	405 061 1100	TR 2SC536-F2-AUD-SPA
or	405 011 8609	TR 2SC1740S-S
or	405 019 3705	TR 2SC536-G-AUD-SPA
Q726	405 021 0600	TR 2SD1012-G-SPA
Q728	405 010 9706	TR 2SC1571-G-NP
Q729	405 010 9706	TR 2SC1571-G-NP
Q730	405 011 8609	TR 2SC1740S-S
or	405 019 3705	TR 2SC536-G-AUD-SPA
Q731	405 010 9706	TR 2SC1571-G-NP
Q732	405 021 0600	TR 2SD1012-G-SPA
Q733	405 011 8609	TR 2SC1740S-S
or	405 019 3705	TR 2SC536-G-AUD-SPA
Q734	405 011 8609	TR 2SC1740S-S
or	405 019 3705	TR 2SC536-G-AUD-SPA
Q735	405 011 8609	TR 2SC1740S-S
or	405 019 3705	TR 2SC536-G-AUD-SPA
Q736	405 020 9703	TR 2SD1011-S
Q737	405 011 8609	TR 2SC1740S-S
or	405 019 3705	TR 2SC536-G-AUD-SPA
Q821	405 061 1100	TR 2SC536-F2-AUD-SPA
or	405 011 8609	TR 2SC1740S-S
or	405 019 3705	TR 2SC536-G-AUD-SPA
Q822	405 011 8609	TR 2SC1740S-S
or	405 019 3705	TR 2SC536-G-AUD-SPA
Q823	405 061 1100	TR 2SC536-F2-AUD-SPA
or	405 011 8609	TR 2SC1740S-S
or	405 019 3705	TR 2SC536-G-AUD-SPA
Q824	405 061 1100	TR 2SC536-F2-AUD-SPA
or	405 011 8609	TR 2SC1740S-S
or	405 019 3705	TR 2SC536-G-AUD-SPA
Q825	405 061 1100	TR 2SC536-F2-AUD-SPA
or	405 011 8609	TR 2SC1740S-S
or	405 019 3705	TR 2SC536-G-AUD-SPA
Q826	405 021 0600	TR 2SD1012-G-SPA
Q828	405 010 9706	TR 2SC1571-G-NP
Q829	405 010 9706	TR 2SC1571-G-NP
Q830	405 011 8609	TR 2SC1740S-S
or	405 019 3705	TR 2SC536-G-AUD-SPA
Q831	405 010 9706	TR 2SC1571-G-NP
Q832	405 021 0600	TR 2SD1012-G-SPA
Q833	405 011 8609	TR 2SC1740S-S
or	405 019 3705	TR 2SC536-G-AUD-SPA
Q834	405 011 8609	TR 2SC1740S-S
or	405 019 3705	TR 2SC536-G-AUD-SPA

Ref. No.	Part No.	Description
Q835	405 011 8609	TR 2SC1740S-S
or	405 019 3705	TR 2SC536-G-AUD-SPA
Q836	405 020 9703	TR 2SD1011-S
Q837	405 011 8609	TR 2SC1740S-S
or	405 019 3705	TR 2SC536-G-AUD-SPA
Q924	405 011 8609	TR 2SC1740S-S
or	405 019 3705	TR 2SC536-G-AUD-SPA
Q927	⚠ 405 023 2602	TR 2SD325-F
Q930	405 010 9706	TR 2SC1571-G-NP
Q931	405 011 8609	TR 2SC1740S-S
or	405 019 3705	TR 2SC536-G-AUD-SPA
Q932	405 011 8609	TR 2SC1740S-S
or	405 019 3705	TR 2SC536-G-AUD-SPA
Q933	405 020 9703	TR 2SD1011-S
Q936	405 011 8609	TR 2SC1740S-S
or	405 019 3705	TR 2SC536-G-AUD-SPA
Q937	405 004 4601	TR 2SA608-F-SPA
Q938	405 011 8609	TR 2SC1740S-S
or	405 019 3705	TR 2SC536-G-AUD-SPA
Q939	405 011 8609	TR 2SC1740S-S
or	405 019 3705	TR 2SC536-G-AUD-SPA
Q940	405 004 4601	TR 2SA608-F-SPA
Q942	405 011 8609	TR 2SC1740S-S
or	405 019 3705	TR 2SC536-G-AUD-SPA
D571	407 005 4505	DIODE DS442X
D572	407 005 4505	DIODE DS442X
D680	407 007 9904	DIODE GMA01
D721	407 007 9904	DIODE GMA01
D722	407 007 9904	DIODE GMA01
D821	407 007 9904	DIODE GMA01
D822	407 007 9904	DIODE GMA01
D924	407 004 9105	DIODE DSF10C
D927	407 053 3703	ZENER DIODE MTZ15B
D937	407 005 4505	DIODE DS442X
D938	407 005 4505	DIODE DS442X
D941	407 053 6407	ZENER DIODE MTZ5.1C
D942	407 053 6407	ZENER DIODE MTZ5.1C
D943	407 007 9904	DIODE GMA01
D946	407 007 9904	DIODE GMA01
D991	407 007 9904	DIODE GMA01
D992	407 007 9904	DIODE GMA01
C574	403 080 8209	POLYPRO 0.012U J 100V
C755	403 067 8307	MT-COMPO 0.68U J 50V
C770	403 059 9008	POLYESTER 0.22U M 50V
C855	403 067 8307	MT-COMPO 0.68U J 50V
C870	403 059 9008	POLYESTER 0.22U M 50V
R798	⚠ 402 041 1907	FUSIBLE RES 1 J- 1/4W
R898	⚠ 402 041 1907	FUSIBLE RES 1 J- 1/4W

POWER SUPPLY P.C.BOARD ASSY

Ref. No.	Part No.	Description
306	614 214 0475	P.C.BOARD ASSY POWER SUPPLY (ITALY)
	614 211 9150	P.C BOARD ASSY, POWER SUPPLY (EUROPE)
	614 199 1986	SOCKET, PHONES
	⚠ 614 020 8740	SOCKET, EXT. AC
	614 123 0023	BRACKET FUSE
	⚠ 614 213 5761	INDUCTOR, FERITE, AC LINE FILTER (EUROPE)
	614 012 9069	RELAY, 15V, 5A
	⚠ 614 028 5123	FILTER, AC LINE FILTER (ITALY)
	⚠ 614 205 6110	HEAT SINK (REF.NO.201)
	⚠ 614 121 5266	HEAT SINK (REF.NO.202)
	614 017 6964	TERMINAL BOARD (EUROPE)
	411 021 5705	SCR S-TPG BIN 3X6MM (REF.NO.203)
	411 021 4005	SCR S-TPG BIN 3X12MM (REF.NO.204)
	614 130 0238	LUG
L921	614 028 6793	FILTER

Ref. No.	Part No.	Description
L922	614 028 6793	FILTER
L925	614 028 2535	FILTER (EUROPE)
S906	⚠ 614 018 6383	SWITCH, VOLTAGE SELECTOR (EUROPE)
CN9	614 017 2584	PLUG, 7P
CN10	614 203 8123	SOCKET, 5P
CN21	614 017 2584	PLUG, 7P
CN22	614 017 2539	PLUG, 2P
CN23	614 017 2096	PLUG, 2P
CN24	614 017 2119	PLUG, 4P
CN25	614 017 2546	PLUG, 3P
IC921	⚠ 409 017 9707	IC LA4508
Q921	405 011 8609	TR 2SC1740S-S
or	405 019 3705	TR 2SC536-G-AUD-SPA
Q922	405 011 8609	TR 2SC1740S-S
or	405 019 3705	TR 2SC536-G-AUD-SPA
Q923	405 011 8609	TR 2SC1740S-S
or	405 019 3705	TR 2SC536-G-AUD-SPA
Q925	405 011 8609	TR 2SC1740S-S
or	405 019 3705	TR 2SC536-G-AUD-SPA
Q926	405 011 8609	TR 2SC1740S-S
or	405 019 3705	TR 2SC536-G-AUD-SPA
Q928	405 004 4601	TR 2SA608-F-SPA
Q929	⚠ 405 007 1607	TR 2SB511-E
or	⚠ 405 007 1805	TR 2SB511-F
or	⚠ 405 007 2109	TR 2SB514-E
or	⚠ 405 007 2208	TR 2SB514-F
Q934	⚠ 405 007 1607	TR 2SB511-E
or	⚠ 405 007 1805	TR 2SB511-F
or	⚠ 405 007 2109	TR 2SB514-E
or	⚠ 405 007 2208	TR 2SB514-F
Q935	⚠ 405 023 2602	TR 2SD325-F
D921	407 005 4505	DIODE DS442X
D922	407 007 9904	DIODE GMA01
D923	407 004 9105	DIODE DSF10C
D925	407 004 9105	DIODE DSF10C
D926	407 007 9904	DIODE GMA01
D928	⚠ 407 004 9105	DIODE DSF10C
D929	⚠ 407 118 0708	DIODE RL253
D930	⚠ 407 118 0708	DIODE RL253
D931	⚠ 407 118 0708	DIODE RL253
D932	⚠ 407 118 0708	DIODE RL253
D933	407 053 8005	ZENER DIODE MTZ7.5B
D934	407 051 6102	ZENER DIODE GZS33Y
D939	407 053 3406	ZENER DIODE MTZ13B
D940	407 053 3703	ZENER DIODE MTZ15B
D945	⚠ 407 004 9105	DIODE DSF10C
C983	403 059 9008	POLYESTER 0.22U M 50V
C998	403 059 9008	POLYESTER 0.22U M 50V
C999	403 059 9008	POLYESTER 0.22U M 50V
C9100	403 059 9008	POLYESTER 0.22U M 50V
C9103	403 001 1906	CERAMIC 0.01U M 16V (EUROPE)
R9117	⚠ 402 032 9707	FUSIBLE RES 2.2 J- 1/4W
R9118	⚠ 402 032 9707	FUSIBLE RES 2.2 J- 1/4W
R9126	⚠ 402 032 9707	FUSIBLE RES 2.2 J- 1/4W
R9127	⚠ 402 041 1907	FUSIBLE RES 1 J- 1/4W
R9128	⚠ 402 004 5003	FUSIBLE RES 18 J- 1/4W
R9129	⚠ 402 004 5003	FUSIBLE RES 18 J- 1/4W

GRAPHIC EQUALIZER P.C.BOARD ASSY

Ref. No.	Part No.	Description
307	614 203 4583	P.C BOARD ASSY, GRAPHIC EQUALIZER
VR701	614 003 7128	VARIABLE RESISTOR, GRAPHIC EQUALIZER (VR701,801)
VR702	614 003 7128	VARIABLE RESISTOR, GRAPHIC EQUALIZER (VR702,802)
VR703	614 003 7128	VARIABLE RESISTOR, GRAPHIC EQUALIZER (VR703,803)
CN11	614 017 2584	PLUG, 7P

EBSS LEVEL CONTROL P.C.BOARD ASSY

Ref. No.	Part No.	Description
308	614 203 4590	P.C BOARD ASSY, EBSS LEVER CONTROL
S904	614 203 6808	SWITCH, EBSS
CN25	614 203 8109	SOCKET, 4P

TAPE MECHANISM CONTROL P.C.BOARD ASSY

Ref. No.	Part No.	Description
309	614 203 9274	P.C BOARD ASSY, TAPE MECHANISM CONTROL
SVR621	614 006 8207	SEMI-FIXED RESISTOR, 2K OHM
SVR622	614 006 8207	SEMI-FIXED RESISTOR, 2K OHM
SVR623	614 006 8207	SEMI-FIXED RESISTOR, 2K OHM
SVR624	614 006 8207	SEMI-FIXED RESISTOR, 2K OHM
CN5	614 017 2614	PLUG, 10P, AMP. P.C.BOARD
CN31	614 017 3888	PLUG, 9P
CN32	614 017 2584	PLUG, 2P
CN33	614 017 2591	PLUG, 8P, TAPE "A"
CN34	614 206 0216	SOCKET, 4P
CN35	614 206 0216	SOCKET, 4P
CN36	614 017 2614	PLUG, 10P, TAPE "B"
CN37	614 206 0216	SOCKET, 4P
CN38	614 017 2560	PLUG, 5P
IC621	409 026 8500	IC L78M05
IC622	409 022 3202	IC LC7800
IC624	409 020 6908	IC LC4011B
IC625	409 053 1703	IC TC9174P
IC626	409 166 5704	IC TC9312AN-078
IC627	409 166 5803	IC TC9312AN-079
Q621	⚠ 405 018 2600	TR 2SC3400
Q622	405 018 2600	TR 2SC3400
Q623	405 018 2600	TR 2SC3400
Q624	405 007 6701	TR 2SB598-F-NP
Q625	405 019 4108	TR 2SC536-G-AUD-NP
Q626	405 007 6701	TR 2SB598-F-NP
Q627	405 019 4108	TR 2SC536-G-AUD-NP
Q628	⚠ 405 024 9907	TR 2SD734-F
Q629	405 004 5004	TR 2SA608-G-NP
Q630	405 007 6701	TR 2SB598-F-NP
Q631	405 018 2600	TR 2SC3400
Q632	405 007 6701	TR 2SB598-F-NP
Q633	405 018 2600	TR 2SC3400
Q634	⚠ 405 024 9907	TR 2SD734-F
Q635	405 004 5004	TR 2SA608-G-NP
Q636	405 019 4108	TR 2SC536-G-AUD-NP
Q637	405 018 2600	TR 2SC3400
Q638	405 018 2600	TR 2SC3400
D621	407 007 9904	DIODE GMA01
D622	407 007 9904	DIODE GMA01
D623	407 007 9904	DIODE GMA01
D624	407 007 9904	DIODE GMA01
D630	407 007 9904	DIODE GMA01
D631	407 005 4505	DIODE DS442X
D632	407 007 9904	DIODE GMA01
D633	407 007 9904	DIODE GMA01

TAPE "A" OPERATION SWITCH P.C.BOARD ASSY

Ref. No.	Part No.	Description
310	614 203 9281	P.C BOARD ASSY, TAPE "A" OPERATION SWITCH
	614 206 1183	SPACER, LED
S621	614 018 9032	SWITCH, F.FWD/REW
S622	614 018 9032	SWITCH, FWD
S623	614 018 9032	SWITCH, STOP
S624	614 018 9032	SWITCH, REV
S625	614 018 9032	SWITCH, F.FWD/REW
D625	407 031 6603	LED SLP-276B
D626	407 031 6603	LED SLP-276B

TAPE "B" OPERATION SWITCH P.C.BOARD ASSY

Ref. No.	Part No.	Description
311	614 203 9298	P.C BOARD ASSY, TAPE "B" OPERATION SWITCH
	614 206 1183	SPACER, LED (2 USED)
	614 206 1176	SPACER, LED
S626	614 018 9032	SWITCH, F.FWD/REW
S627	614 018 9032	SWITCH, FWD
S628	614 018 9032	SWITCH, STOP
S629	614 018 9032	SWITCH, REV
S630	614 018 9032	SWITCH, F.FWD/REW
S631	614 018 9032	SWITCH, RECORD
D627	407 031 6603	LED SLP-276B, GREEN
D628	407 031 6603	LED SLP-276B, GREEN
D629	407 114 8500	LED SLC-22VR3F-H
or	407 114 8609	LED SLC-22VR3F-J

TAPE MECHANISM RELAY P.C.BOARD ASSY

Ref. No.	Part No.	Description
312	614 203 9311	P.C BOARD ASSY, TAPE MECHANISM RELAY
CN32	614 207 6941	SOCKET, 7P
CN38	614 207 6958	SOCKET, 5P
IC623	409 141 6405	IC TC9173P

REVERSE MODE/TAPE"B"TIMER STANDBY SWITCH

Ref. No.	Part No.	Description
313	614 203 9304	P.C BOARD ASSY, REVERSE MODE/ TAPE "B" TIMER STANDBY SWITCH
S632	614 199 1955	SWITCH, REV MODE
S633	614 199 1955	SWITCH, TIMER STANDBY

BATTERY TERMINAL (-) P.C.BOARD ASSY

Ref. No.	Part No.	Description
314	614 205 4727	ASSY, PCB, TERMINAL (-)
	614 199 0484	TERMINAL BATTERY (-) (2 USED)
	614 207 9577	SOCKET, 2P

BATTERY TERMINAL (+) P.C.BOARD ASSY

Ref. No.	Part No.	Description
315	614 205 4734	ASSY, PCB, TERMINAL (+)
	614 199 0484	TERMINAL BATTERY (-)

CD MAIN P.C.BOARD ASSY

Ref. No.	Part No.	Description
316	614 213 8090	P.C BOARD ASSY, CD MAIN
	614 130 0238	LUG
	614 200 0304	CERAMIC RESONATOR, 8.46MHZ
	614 017 7961	TERMINAL BOARD
L301	614 028 6748	FILTER
L451	614 028 4133	FILTER
L460	614 215 7916	INDUCTOR, FERITE
L461	614 215 7916	INDUCTOR, FERITE
L901	614 215 7930	INDUCTOR, FERITE
L902	614 215 7930	INDUCTOR, FERITE
SVR301	614 203 6617	SEMI-FIXED RESISTOR, 22K OHM
SVR302	632 246 9419	SEMI-FIXED RESISTOR, 47K OHM
SVR351	614 203 6617	SEMI-FIXED RESISTOR, 22K OHM
SVR352	614 203 6617	SEMI-FIXED RESISTOR, 22K OHM
SVR353	614 203 6556	SEMI-FIXED RESISTOR, 2.2K OHM

Ref. No.	Part No.	Description
CN	614 017 2539	PLUG, 2P, PLL TEST POINT
or	614 017 2539	PLUG, 2P, RF TEST POINT
or	614 017 2539	PLUG, 2P, FE/TE TEST POINT
CN7	614 017 2577	PLUG, 6P
or	614 207 8013	SOCKET, 6P
CN51	614 208 0627	PLUG, 10P
or	614 215 7909	SOCKET, 10P
CN52	614 017 2591	PLUG, 8P
or	614 207 8037	SOCKET, 8P
CN53	614 017 2591	PLUG, 8P
CN54	614 017 2607	PLUG, 9P
CN55	614 207 7856	SOCKET, 8P
or	614 208 0603	PLUG, 8P
CN56	614 017 2607	PLUG, 9P
or	614 207 8044	SOCKET, 8P
CN57	614 207 8051	SOCKET, 3P
CN58	614 017 2546	PLUG, 3P
or	614 207 8068	SOCKET, 3P
IC301	409 108 5502	IC CXA1081M
IC351	409 108 5601	IC CXA1082AQ
IC401	409 159 8705	IC LA6531
IC451	409 108 5700	IC CXD1130Q
IC452	409 004 5923	IC CXK5816M-15L-T1
or	409 020 6205	IC LC3517AM-15
IC453	409 172 2308	IC UPD82C43G
IC551	QLC7880M----G	IC LC7880M-T1-TP
IC701	QNJM4558M-S-G	IC NJM4558M-S-T1
IC702	QNJM4558M-S-G	IC NJM4558M-S-T1
IC901	⚠ 614 002 3299	IC-PROTECTOR ICP-F25
IC902	409 112 1002	IC M5278L05
IC905	⚠ 409 112 1002	IC M5278L05
Q301	405 007 6701	TR 2SB598-F-NP
Q504	405 000 4100	TR DTC124EK
Q505	405 000 1109	TR DTA124EK
Q506	405 000 4407	TR DTC124ES
Q701	405 029 3207	TR DTC114TK
Q801	405 029 3207	TR DTC114TK
Q901	405 019 3705	TR 2SC536-G-AUD-SPA
Q903	⚠ 405 035 7008	TR 2SC3851-Y
Q906	405 000 4407	TR DTC124ES
D451	407 005 4505	DIODE DS442X
or	407 013 7109	DIODE 1S2473
D452	407 005 4505	DIODE DS442X
or	407 013 7109	DIODE 1S2473
D901	407 053 6704	ZENER DIODE MTZ5.6B
D902	407 070 8408	ZENER DIODE GZS9.1Y
or	407 053 8807	ZENER DIODE MTZ9.1B
D904	407 051 6904	ZENER DIODE GZS5.6Y
or	407 053 6704	ZENER DIODE MTZ5.6B
C361	403 063 1609	POLYESTER 0.068U J 50V
R1	401 037 5004	MT-GLAZE 0.000 ZA 1/10W
R3	401 037 5004	MT-GLAZE 0.000 ZA 1/10W
R4	401 037 5004	MT-GLAZE 0.000 ZA 1/10W
R5	401 037 5004	MT-GLAZE 0.000 ZA 1/10W
R6	401 037 5004	MT-GLAZE 0.000 ZA 1/10W
R7	401 037 5004	MT-GLAZE 0.000 ZA 1/10W
R8	401 037 5004	MT-GLAZE 0.000 ZA 1/10W
R9	401 037 5004	MT-GLAZE 0.000 ZA 1/10W
R10	401 037 5004	MT-GLAZE 0.000 ZA 1/10W
R11	401 037 5004	MT-GLAZE 0.000 ZA 1/10W
R13	401 037 5004	MT-GLAZE 0.000 ZA 1/10W
R14	401 037 5004	MT-GLAZE 0.000 ZA 1/10W
R15	401 037 5004	MT-GLAZE 0.000 ZA 1/10W
R16	401 037 5004	MT-GLAZE 0.000 ZA 1/10W
R17	401 037 5004	MT-GLAZE 0.000 ZA 1/10W
R19	401 037 5004	MT-GLAZE 0.000 ZA 1/10W
R51	401 035 4108	MT-GLAZE 0.000 ZA 1/8W
R52	401 035 4108	MT-GLAZE 0.000 ZA 1/8W
R53	401 035 4108	MT-GLAZE 0.000 ZA 1/8W
R55	401 035 4108	MT-GLAZE 0.000 ZA 1/8W
R56	401 035 4108	MT-GLAZE 0.000 ZA 1/8W
R58	401 035 4108	MT-GLAZE 0.000 ZA 1/8W
R59	401 035 4108	MT-GLAZE 0.000 ZA 1/8W
R60	401 035 4108	MT-GLAZE 0.000 ZA 1/8W

PARTS LIST

Ref. No.	Part No.	Description
R62	401 035 4108	MT-GLAZE 0.000 ZA 1/8W
R65	401 035 4108	MT-GLAZE 0.000 ZA 1/8W
R67	401 035 4108	MT-GLAZE 0.000 ZA 1/8W
R68	401 035 4108	MT-GLAZE 0.000 ZA 1/8W
R69	401 035 4108	MT-GLAZE 0.000 ZA 1/8W
R70	401 035 4108	MT-GLAZE 0.000 ZA 1/8W
R301	401 035 4900	MT-GLAZE 1K JA 1/8W
R302	401 037 6506	MT-GLAZE 12 JA 1/10W
R303	401 039 0403	MT-GLAZE 8.2K JA 1/10W
R304	401 037 6803	MT-GLAZE 12K JA 1/10W
R306	401 037 6704	MT-GLAZE 1.2K JA 1/10W
R307	401 037 6704	MT-GLAZE 1.2K JA 1/10W
R308	401 038 0800	MT-GLAZE 22K JA 1/10W
R309	401 037 5707	MT-GLAZE 100K JA 1/10W
R313	401 037 9309	MT-GLAZE 18K JA 1/10W
R314	401 037 9309	MT-GLAZE 18K JA 1/10W
R352	401 037 8104	MT-GLAZE 150K JA 1/10W
R353	401 038 0800	MT-GLAZE 22K JA 1/10W
R355	401 037 5707	MT-GLAZE 100K JA 1/10W
R356	401 038 7809	MT-GLAZE 56K JA 1/10W
R357	401 039 0502	MT-GLAZE 82K JA 1/10W
R358	401 038 6505	MT-GLAZE 47K JA 1/10W
R359	401 037 5707	MT-GLAZE 100K JA 1/10W
R360	401 037 9309	MT-GLAZE 18K JA 1/10W
R361	401 037 5707	MT-GLAZE 100K JA 1/10W
R362	401 038 5409	MT-GLAZE 390K JA 1/10W
R364	401 037 5707	MT-GLAZE 100K JA 1/10W
R365	401 037 5707	MT-GLAZE 100K JA 1/10W
R366	401 037 5608	MT-GLAZE 10K JA 1/10W
R367	401 037 9408	MT-GLAZE 180K JA 1/10W
R368	401 038 3603	MT-GLAZE 3.3K JA 1/10W
R369	401 035 8007	MT-GLAZE 15D JA 1/8W
R370	401 035 5709	MT-GLAZE 1M JA 1/8W
R371	401 038 7809	MT-GLAZE 56K JA 1/10W
R401	401 016 4806	CARBON 22K JA 1/4W
R402	401 037 6803	MT-GLAZE 12K JA 1/10W
R403	401 038 0800	MT-GLAZE 22K JA 1/10W
R406	401 038 0800	MT-GLAZE 22K JA 1/10W
R430	401 037 6803	MT-GLAZE 12K JA 1/10W
R451	401 037 5707	MT-GLAZE 100K JA 1/10W
R453	401 037 5806	MT-GLAZE 1M JA 1/10W
R481	401 037 9200	MT-GLAZE 1.8K JA 1/10W
R485	401 035 4900	MT-GLAZE 1K JA 1/8W
R501	401 037 5400	MT-GLAZE 1K JA 1/10W
R502	401 037 5400	MT-GLAZE 1K JA 1/10W
R503	401 037 5400	MT-GLAZE 1K JA 1/10W
R504	401 037 5400	MT-GLAZE 1K JA 1/10W
R505	401 037 5608	MT-GLAZE 10K JA 1/10W
R506	401 037 5707	MT-GLAZE 100K JA 1/10W
R507	401 037 5707	MT-GLAZE 100K JA 1/10W
R508	401 037 5707	MT-GLAZE 100K JA 1/10W
R528	401 038 6307	MT-GLAZE 470 JA 1/10W
R543	401 037 9200	MT-GLAZE 1.8K JA 1/10W
R544	401 037 5608	MT-GLAZE 10K JA 1/10W
R545	401 037 5608	MT-GLAZE 10K JA 1/10W
R701	401 038 3900	MT-GLAZE 3.3M JA 1/10W
R702	401 038 7700	MT-GLAZE 5.6K JA 1/10W
R703	401 038 0800	MT-GLAZE 22K JA 1/10W
R704	401 038 6505	MT-GLAZE 47K JA 1/10W
R705	401 038 0800	MT-GLAZE 22K JA 1/10W
R706	401 038 0909	MT-GLAZE 220K JA 1/10W
R707	401 038 7601	MT-GLAZE 560 JA 1/10W
R708	401 038 0602	MT-GLAZE 220 JA 1/10W
R709	401 038 6604	MT-GLAZE 470K JA 1/10W
R710	401 037 5608	MT-GLAZE 10K JA 1/10W
R801	401 038 3900	MT-GLAZE 3.3M JA 1/10W
R802	401 038 7700	MT-GLAZE 5.6K JA 1/10W
R803	401 038 0800	MT-GLAZE 22K JA 1/10W
R804	401 038 6505	MT-GLAZE 47K JA 1/10W
R805	401 038 0800	MT-GLAZE 22K JA 1/10W
R806	401 038 0909	MT-GLAZE 220K JA 1/10W
R807	401 038 7601	MT-GLAZE 560 JA 1/10W
R808	401 038 0602	MT-GLAZE 220 JA 1/10W

Ref. No.	Part No.	Description
R809	401 038 6604	MT-GLAZE 470K JA 1/10W
R810	401 037 5608	MT-GLAZE 10K JA 1/10W
R901	401 037 5400	MT-GLAZE 1K JA 1/10W
R902	401 038 9001	MT-GLAZE 680 JA 1/10W
R903	401 038 9001	MT-GLAZE 680 JA 1/10W

DISPLAY P.C.BOARD ASSY

Ref. No.	Part No.	Description
317	614 214 1236	P.C BOARD ASSY, DISPLAY
	614 203 8260	FLUORESCENT DISPLAY
	614 130 0238	LUG
	614 204 9693	CUSHION, FL FIX
	614 207 2479	SHIELD, FL SHIELD
IR	614 203 7928	SPECIAL SWITCH, REMOTE, SENSOR
CT501	614 007 8657	TRIMMER, 30PF
X501	614 206 2494	CERAMIC RESONATOR
X502	614 008 1046	CRYSTAL
S501	614 024 2393	SWITCH, REPEAT
S502	614 024 2393	SWITCH, STOP/CLEAR
S503	614 024 2393	SWITCH, MEMORY
S504	614 024 2393	SWITCH, PLAY/PAUSE
S505	614 024 2393	SWITCH, SKIP/SEARCH
S506	614 024 2393	SWITCH, SKIP/SEARCH
S507	614 024 2393	SWITCH, OPEN/CLOSE
S508	614 024 2393	SWITCH, EDIT
S509	614 024 2393	SWITCH, DISC A/B
S510	614 018 9056	SWITCH, CD DUBBING
S511	614 018 9056	SWITCH, TAPE NORMAL
S512	614 018 9056	SWITCH, TAPE HIGH SPEED
S513	614 024 2393	SWITCH, MODE/SET
S514	614 024 2393	SWITCH, OPERATION
S515	614 024 2393	SWITCH, HOUR
S516	614 024 2393	SWITCH, MINUTE
S517	614 024 2393	SWITCH, TIMER SELECT
S518	614 024 2393	SWITCH, TIMER 1/2
S519	614 018 9056	SWITCH, FUNCTION/CD
S520	614 018 9056	SWITCH, FUNCTION/TAPE
S521	614 018 9056	SWITCH, FUNCTION/TUNER
S522	614 018 9056	SWITCH, FUNCTION/LINE
S523	614 024 2393	SWITCH, VOLUME/UP
S524	614 024 2393	SWITCH, VOLUME/DOWN
S525	614 024 2393	SWITCH, POWER
CN8	614 203 6907	SOCKET, 9P
CN21	614 203 6891	SOCKET, 7P
CN31	614 205 2037	SOCKET, 9P
CN51	614 205 7278	PLUG, 10P
CN55	614 205 7254	PLUG, 8P
CN71	614 205 2044	SOCKET, 3P
RA502	614 004 6625	RESISTOR, 10K OHM
RA503	614 004 6625	RESISTOR, 10K OHM
RA505	614 203 6747	RESISTOR, 100K OHM X14
IC501	410 061 0503	IC UPD75216ACW-212
IC502	409 169 4704	IC BA6810S
IC903	409 036 8408	IC M5237L
IC904	614 002 3282	IC-PROTECTOR ICP-F20
Q502	405 004 5103	TR 2SA608-G-SPA
Q503	405 004 5103	TR 2SA608-G-SPA
Q511	405 000 3400	TR DTC114TS
Q512	405 000 1208	TR DTA124ES
Q907	⚠ 405 008 8506	TR 2SB825-R
or	⚠ 405 007 1607	TR 2SB511-E
or	⚠ 405 007 2109	TR 2SB514-E
D501	407 070 8408	ZENER DIODE GZS9.1Y
or	407 053 8807	ZENER DIODE MTZ9.1B
D502	407 005 4505	DIODE DS442X
or	407 013 7109	DIODE 1S2473
D503	407 005 4505	DIODE DS442X
or	407 013 7109	DIODE 1S2473
D504	407 005 4505	DIODE DS442X
or	407 013 7109	DIODE 1S2473

PARTS LIST

Ref. No.	Part No.	Description
D505	407 005 4505	DIODE DS442X
or	407 013 7109	DIODE 1S2473
D506	407 005 4505	DIODE DS442X
or	407 013 7109	DIODE 1S2473
D507	407 005 4505	DIODE DS442X
or	407 013 7109	DIODE 1S2473
D508	407 005 4505	DIODE DS442X
or	407 013 7109	DIODE 1S2473
D509	407 005 4505	DIODE DS442X
or	407 013 7109	DIODE 1S2473
D510	407 007 9904	DIODE GMA01
or	407 012 4406	DIODE 1SS133
D515	407 005 4505	DIODE DS442X
or	407 013 7109	DIODE 1S2473
D905	407 007 9904	DIODE GMA01
or	407 012 4406	DIODE 1SS133
D906	407 007 9904	DIODE GMA01
or	407 012 4406	DIODE 1SS133
D907	407 005 9807	DIODE ERA81-004
C513	403 057 0007	POLYESTER 0.01U J 50V

DISC LED P.C.BOARD ASSY

Ref. No.	Part No.	Description
318	614 203 9229	P.C BOARD ASSY, DISC LED
	407 027 7607	LED SLP-154B, RED

CONNECTOR P.C.BOARD ASSY

Ref. No.	Part No.	Description
319	614 205 0965	P.C BOARD ASSY, CONNECTOR
CN57	614 017 3826	PLUG, 3P
CN71	614 017 2546	PLUG, 3P

TRANSISTOR P.C.BOARD ASSY

Ref. No.	Part No.	Description
320	614 205 0972	P.C BOARD ASSY, TRANSISTOR
CN58	614 017 2546	PLUG, 3P
Q905	⚠ 405 035 7008	TR 2SC3851-Y

REMOTE CONTROL

PACKING & ACCESSORIES

Ref. No.	Part No.	Description
	614 208 6995	REMOCON ASSY (RB-CD950/US)
	614 205 6660	POLY COVER, 90X270MM

CABINET & CHASSIS

Ref. No.	Part No.	Description
1	614 208 5912	ASSY,CABINET
2	614 208 5929	CABINET,BOTTOM
3	614 205 6516	LID,BATTERY
4	614 208 5943	BUTTON
5	614 208 5950	TERMINAL, BATTERY
6	614 208 5967	TERMINAL, BATTERY
7	411 101 7506	SCR S-TPG FLT 2.6X12MM
8	614 208 5974	FILTER
	614 208 5899	LABEL, BATTERY LID MTG

REMOCON P.C.BOARD ASSY

Ref. No.	Part No.	Description
9	614 208 5813	P.C BOARD, REMOCON
X1	614 199 8435	CERAMIC RESONATOR
IC1	410 028 2304	IC UPD6122G
Q1	405 015 3006	TR 2SC2673-R
LED1	408 004 0703	LED SLR-932A
D1	407 012 4406	DIODE 1SS133
D2	407 012 4406	DIODE 1SS133
D3	407 012 4406	DIODE 1SS133
D4	407 012 4406	DIODE 1SS133

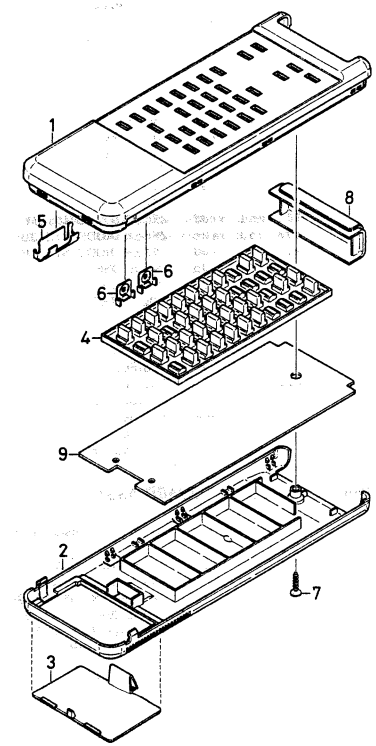

EXPLODED VIEW (CD MECHANISM)

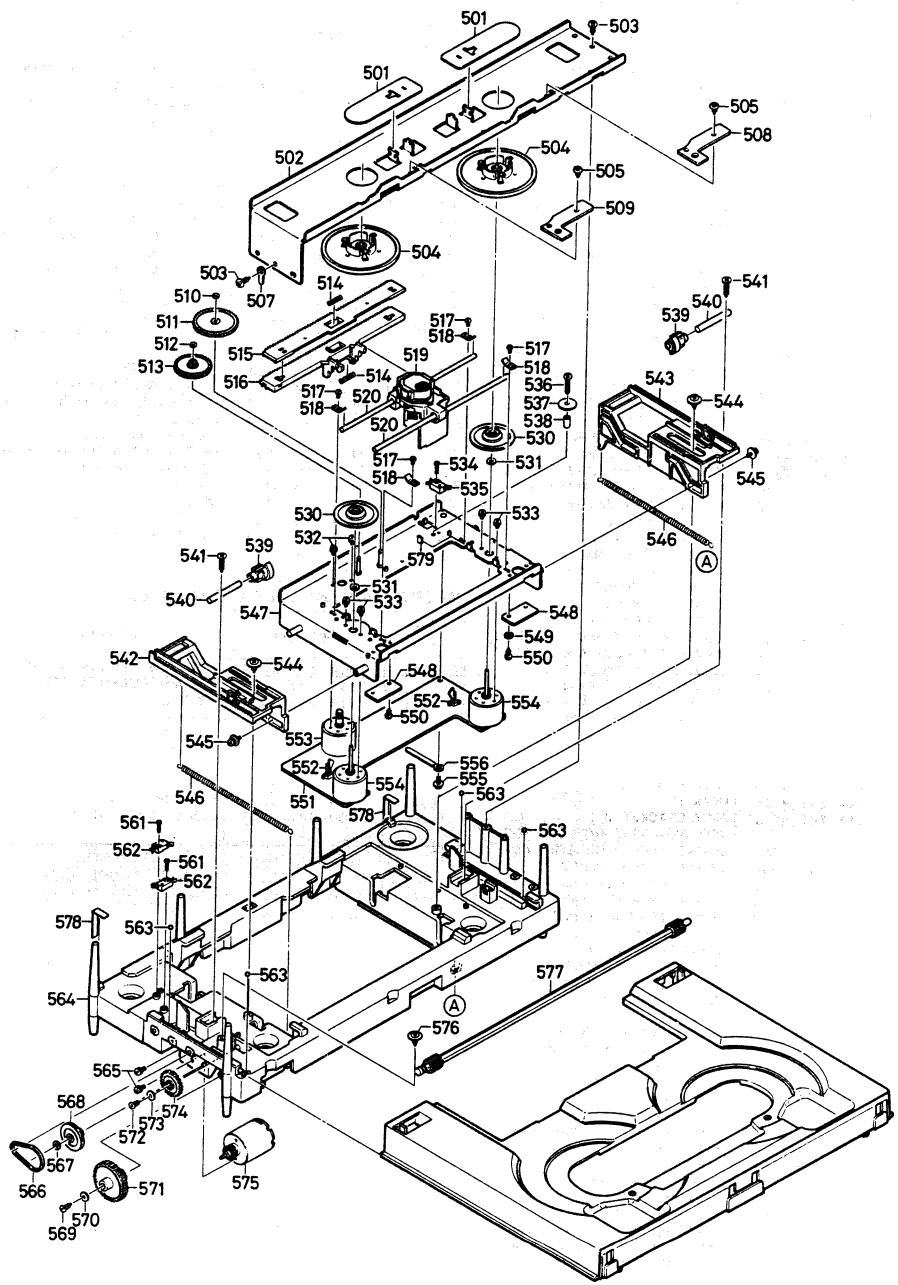

PARTS LIST

CD MECHANISM (PM–DADW1/U)

Ref. No.	Part No.	Description
501	614 202 5277	SPRING PLATE, CHUCK
502	614 202 5086	BRACKET, CHUCK
503	411 021 6405	SCR S-TPG BIN 3X8MM, FIXING FOR BRACKET
504	614 212 1696	PULLEY ASSY, CHUCK
505	411 021 5101	SCR S-TPG BIN 3X4MM, FIXING FOR P.C BOARD
507	614 051 9785	LUG, MECHANISM, GROUND
510	412 013 0609	SPECIAL WASHER, 1.6X3.2X0.25MM, FIXING FOR GEAR
511	614 207 4053	GEAR, PICK-UP SENDING
512	412 013 0609	SPECIAL WASHER, 1.6X3.2X0.25MM, FIXING FOR GEAR
513	614 202 5192	GEAR, PICK-UP SENDING
514	614 151 7223	SPRING COIL, PREVENT FOR BACKLASH
515	614 202 5222	GEAR, PICK-UP SENDING
516	614 202 5215	GEAR, PICK-UP SENDING
517	411 028 2806	SCR S-TPG PAN 2X3MM, FIXING FOR SP. PLATE
518	614 207 2653	SPRING PLATE, RAIL PRESS
519	614 203 7829	PICK UP
520	614 203 9632	SHAFT, RAIL FOR PICK-UP
530	614 210 2954	TURN TABLE
531	412 032 0208	SPECIAL WASHER, TURN TABLE
532	411 044 7007	SCR PAN+SW 2X3MM, FIXING FOR SLED MOTOR
533	411 044 7007	SCR PAN+SW 2X3MM, FIXING FOR SPINDLE MOTOR
534	411 104 4205	SCR TPG PAN PCS 1.7X8MM, FIXING FOR SWITCH
535	614 018 9223	SWITCH, DISC SELECT
536	411 028 7801	SCR S-TPG PAN 3X14MM, FIXING FOR PIPE
537	411 092 3709	WASHER Z 3X13X1MM, RACK SEPARATE STOPPER
538	614 127 8674	PIPE, RACK GUIDE
539	614 202 5185	GEAR, TIMING
540	614 203 9687	SHAFT
541	411 021 3503	SCR S-TPG BIN 3X10MM, FIXING FOR SHAFT
542	614 202 5253	SLIDE, LEFT
543	614 202 5246	SLIDE, RIGHT
544	412 003 1708	SPECIAL SCREW, FIXING FOR SLIDE
545	411 036 2805	SCR PAN+SW+W 2.6X6MM, BASE MECHANISM GUIDE
546	614 205 7636	SPRING COIL, BALANCE FOR BASE MECHANISM
547	614 205 7575	CHASSIS ASSY, BASE
549	411 085 0500	WASHER OUT TW 2X4.8X0.32MM, GROUND
550	411 022 7500	SCR S-TPG PAN 2X4MM, FIXING FOR P.C BOARD
552	614 201 7432	SWITCH, PICK INITIAL
553	614 205 7889	COMMUTATE MOTOR ASSY, SLED MOTOR
554	614 203 9403	COMMUTATE MOTOR, SPINDLE
555	411 080 1403	SCR TPG PAN+SW, 2.6X6MM
556	614 129 9136	LUG, PRESS FOR LEAD
561	411 104 4205	SCR TPG PAN PCS 1.7X8MM, FIXING FOR SWITCH
562	614 018 9223	SWITCH, TRAY OPEN, CHUCKING
563	614 204 0157	STEEL BALL, 2.5MM
564	614 205 7582	CHASSIS ASSY, LOADING
565	411 003 8809	SCR PAN+SW 2.6X6MM, FIXING FOR MOTOR
566	614 207 4619	SQUARE BELT
567	412 022 6500	SPECIAL WASHER, FIXING FOR PULLEY
568	614 135 9120	PULLEY
569	411 022 7807	SCR S-TPG PAN 2X6MM, FIXING FOR GEAR
570	411 087 4704	WASHER V 2X6X0.4MM, FIXING FOR GEAR
571	614 202 5154	GEAR
572	411 022 7500	SCR S-TPG PAN 2X4MM, FIXING FOR GEAR
573	411 092 3709	WASHER V 3X13X1MM FIXING FOR GEAR
574	614 202 5161	GEAR
575	614 194 6092	COMMUTATE MOTOR ASSY, TRAY LOADING
576	412 003 1708	SPECIAL SCREW, FIXING FOR SHAFT
577	614 205 7599	GEAR ASSY, TRAY LOADING
578	614 207 4220	CUSHION, 35X10MM
579	614 208 6575	SPACER, CHASSIS ASSY, BASE (547 MTG.)
	614 125 6443	CUSHION, 15X25X3MM, PRESS FOR LEAD
	614 207 2493	SHEET, 47X119MM, PROTECTION FOR LEAD, (502 MTG.)
	614 207 2486	CUSHION, 5X47X3MM, FIXING FOR SHEET
CN81	614 205 2020	SOCKET, 6P, SWITCH/MOTOR

PHOTO SENSOR (B) P.C.BOARD ASSY

Ref. No.	Part No.	Description
508	614 203 7584	P.C BOARD ASSY, PHOTO SENSOR
Q508	405 000 9303	TR PH102

PHOTO SENSOR (A) P.C.BOARD ASSY

Ref. No.	Part No.	Description
509	614 203 7591	P.C BOARD ASSY, PHOTO SENSOR
Q507	405 000 9303	TR PH102

LED P.C.BOARD ASSY

Ref. No.	Part No.	Description
548	614 203 7607	P.C BOARD ASSY, CD MECHANISM LED
	407 016 9100	LED PR2222S-B1 (D510 OR 511)

CD MECHANISM P.C.BOARD ASSY

Ref. No.	Part No.	Description
551	614 213 8113	P.C BOARD ASSY, CD MECHANISM
SVR401	614 203 6587	SEMI -FIXED RESISTOR
RL401	614 203 7874	RELAY
CN54	614 207 8129	SOCKET, 9P, BROWN
CN56	614 207 8112	SOCKET, 9P, RED
CN81	614 017 3857	PLUG, 6P
IC402	409 159 8705	IC LA6531
IC403	409 085 1900	IC LB1645N
IC404, 405	⚠ 614 002 3268	IC-PROTECTOR ICP-F10
Q401	405 021 0600	TR 2SD1012-G-SPA
Q430	405 075 7600	TR DTA114TS
Q904	405 023 2602	TR 2SD325-F
D401	407 007 9904	DIODE GMA01
D402	407 053 6407	ZENER DIODE MTZ5.1C
D903	407 070 1409	ZENER DIODE GZS12Z
or	407 053 3307	ZENER DIODE MTZ12C
R440	⚠ 402 024 8909	FUSIBLE RES 1 J- 1/2W

EXPLODED VIEW (TAPE MECHANISM " A ")

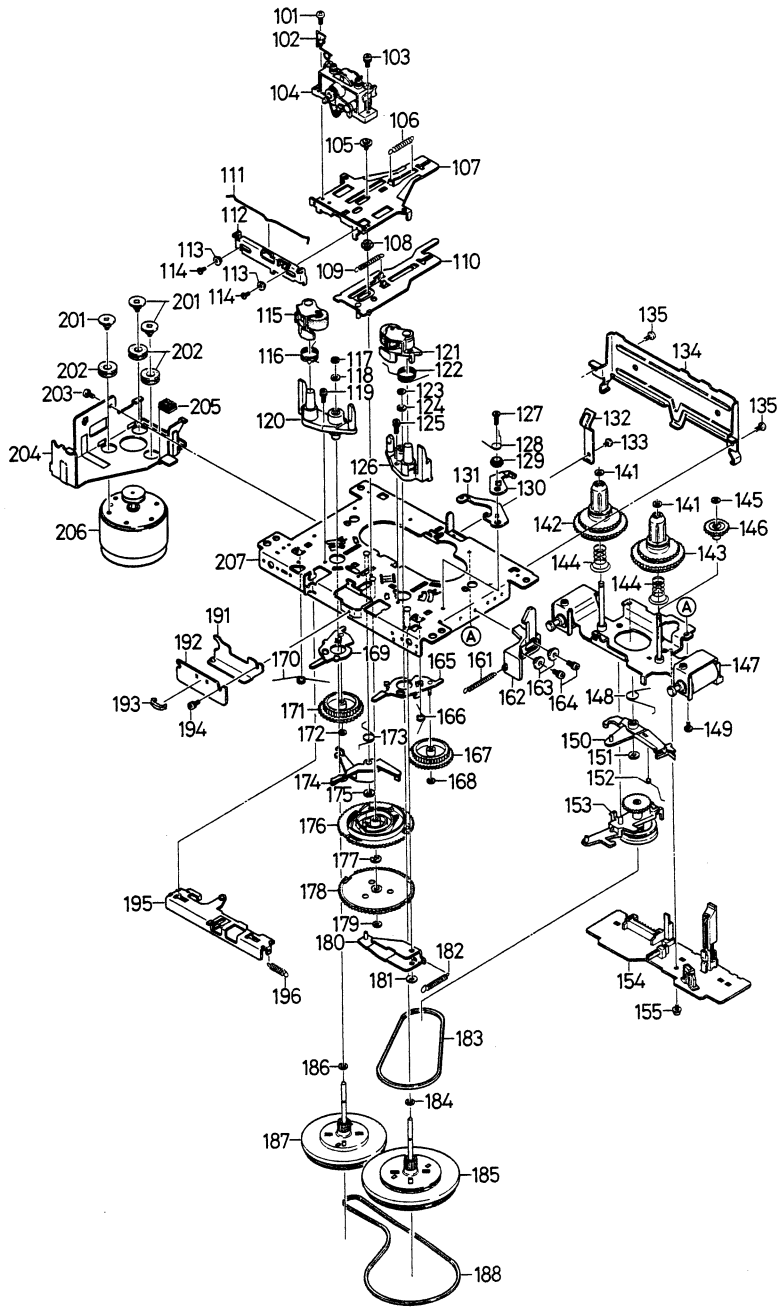

PARTS LIST

TAPE MECHANISM "A" (TM-WCD950PTN)

Ref. No.	Part No.	Description
101	412 032 4800	SPECIAL SCREW, 2X5MM
102	614 206 5105	SPRING, WIRE, CLAMP
103	412 032 2707	SPECIAL SCREW, 2X5MM
104	614 207 6200	ASSY, HEAD, PLAY, ROTALY
105	412 032 3001	SPECIAL SCREW, 2X5MM
106	614 206 3286	SPRING, TENS, REV/CUE SPRING
107	614 206 3248	SLIDE, HEAD PANEL (A)
108	614 206 3132	COLLAR, PANEL COLLAR
109	614 206 3293	SPRING, TENS, PANEL SPRING
110	614 206 2821	ASSY, SLIDE, HEAD PANEL (B)
111	614 206 3378	SPRING, WIRE, PINCH ROLLER SPRING
112	614 206 3194	LEVER, CHP LEVER
113	614 206 3118	COLLAR, CHP LEVER COLLAR
114	412 032 2806	SPECIAL SCREW, 1.7X3MM
115	614 207 1557	ASSY, PINCH ROLLER ARM (R)
116	614 206 3361	SPRING, WIRE, P ARM (R)
117	412 027 9803	SPECIAL WASHER, 2.1X3.5X0.5MM
118	412 032 5401	SPECIAL WASHER, 1.55X3.5X05MM
119	412 032 3605	SPECIAL SCREW, 2X6MM
120	614 206 2715	ASSY, BRACKET-E, FL METAL ASSY (R)
121	614 206 2784	ASSY, PINCH ROLLER ARM (F)
122	614 206 3354	SPRING, WIRE, P ARM (F)
123	412 032 3506	SPECIAL WASHER, 2.1X3.5X0.5MM
124	412 032 3704	SPECIAL WASHER, 1.8X4X0.5MM
125	412 032 3605	SPECIAL SCREW, 2X6MM
126	614 206 2722	ASSY, BRACKET-E, FLYWHEEL METAL
127	412 032 2400	SPECIAL SCREW, 2MM
128	614 206 3316	SPRING, WIRE, E STOPPER
129	614 206 3095	COLLAR, E STOPPER COLLER
130	614 206 3163	LEVER, E STOPPER A
131	614 206 3156	LEVER, E STOPPER B
132	614 206 3200	PLATE, CASSETTE HOLDER SPRING
133	412 027 2606	SPECIAL SCREW, 2X3MM
134	614 206 3224	SLIDE, SWITCH PROTECTOR
135	412 004 0908	SPECIAL SCREW, 2X4MM
141	412 032 3902	SPECIAL WASHER, 1.4X3.2X0.4MM
142	614 207 2158	ASSY, REEL, TAKE-UP (R)
143	614 206 4399	ASSY, REEL, TAKE-UP (F)
144	614 206 3309	SPRING, COMP, BACK TENSION SPRING (R)
145	412 013 4904	SPECIAL WASHER, 1.2X3X0.25MM
146	614 206 4658	GEAR, FF
147	614 207 6231	ASSY, BRACKET-M, REEL BASE ASSY, WITH SOLENOID
148	614 206 5099	SPRING, WIRE FR TRIGGER ARM
149	412 004 0908	SPECIAL SCREW, 2X4MM
150	614 206 3149	LEVER, RF TRIGGER ARM
151	412 032 3803	SPECIAL WASHER, 2.1X5X0.4MM
152	614 207 7993	SPRING, RF TRIGGER ARM
153	614 206 4436	ASSY, PULLEY, REW/F.FWD CLUTCH
155	412 032 2509	SPECIAL SCREW, 2X5MM
161	614 206 3262	SPRING, TENS, E SLIDE LEVER
162	614 206 3217	SLIDE, E SLIDE LEVER
163	614 206 3125	COLLAR
164	412 032 2509	SPECIAL SCREW, 2X5MM
165	614 207 2882	ASSY, LEVER, T GEAR ARM (F)
166	614 206 3323	SPRING, WIRE, TAKE-UP GEAR ARM (F)
167	614 206 4207	GEAR, TAKE-UP
168	412 013 4904	SPECIAL WASHER, P WASHER CUT, 1.2X3X0.25MM
169	614 206 4467	ASSY, LEVER, T GEAR ARM (R)
170	614 206 3330	SPRING, WIRE, TAKE-UP GEAR ARM (R)
171	614 206 4207	GEAR, TAKE-UP
172	412 013 4904	SPECIAL WASHER, P WASHER CUT, 1.2X3X0.25MM
173	614 206 3347	SPRING, WIRE, M TRIGGER ARM
174	614 206 3170	LEVER, M TRIGGER ARM
175	412 032 3308	SPECIAL WASHER, 2.1X5X0.4MM
176	614 206 3002	GEAR, MAIN GEAR
177	412 032 3100	SPECIAL WASHER, E RING 2MM
178	614 206 3019	GEAR, RF CAM GEAR
179	412 032 3209	SPECIAL WASHER, 1.55X3.5X0.5MM
180	614 206 2807	ASSY, LEVER, PANEL KICK LEVER
181	412 032 3308	SPECIAL WASHER, 2.1X5X0.4MM
182	614 206 5044	SPRING, TENS, PANEL KICK LEVER
183	614 206 4849	BELT, FLAT, REW/F.FWD BELT
184	412 032 4701	SPECIAL WASHER, 2.3X3.8X0.3MM
185	614 206 2777	ASSY, FLYWHEEL (F)
186	412 032 4602	SPECIAL WASHER, 2.3X3.8X0.3MM
187	614 206 2760	ASSY, FLYWHEEL (R)
188	614 206 3064	BELT, FLAT, MAIN BELT
191	614 206 5006	PLATE, SHIELD PLATE
192	614 206 3408	PCB, ROTARY HEAD P.C.BOARD, RELAY
193	614 206 2975	FIXER, WIRE CLAMP
194	412 032 2905	SPECIAL SCREW, 2X5MM
195	614 206 2814	ASSY, SLIDE, CHANGE SLIDE LEVER
196	614 206 3279	SPRING, TENS, CHANGE SLIDE LEVER
201	412 032 4008	SPECIAL SCREW, MOTOR COLLAR
202	614 206 2944	CUSHION, RUBBER, MOTOR
203	412 004 0908	SPECIAL SCREW, 2X4MM
204	614 206 2890	BRACKET-MOTOR
205	614 206 2951	CUSHION, BRACKET MOTOR
206	614 207 1298	COMMUTATE MOTOR ASSY
207	614 206 2708	ASSY, CHASSIS

MECHANISM SWITCH P.C.BOARD ASSY

Ref. No.	Part No.	Description
154	614 207 6217	ASSY, PCB, MECHANISM SWITCH
	614 206 3392	PCB, MECHANISM SWITCH
	614 206 3538	SWITCH, LEAF, CASSETTE DIRECTION, S641
	614 206 2968	HOLDER, IC PROTECTOR
	409 077 4407	IC LB9050, HALL IC, IC628
	614 206 5112	SWITCH, LEAF, PLAY, S642
	614 206 5129	SWITCH, LEAF, F.FWD/REW, S643
	614 017 3871	PLUG, 8P, CN33
	407 004 9105	DIODE DSF10C, D1, D2

EXPLODED VIEW (TAPE MECHANISM " B ")

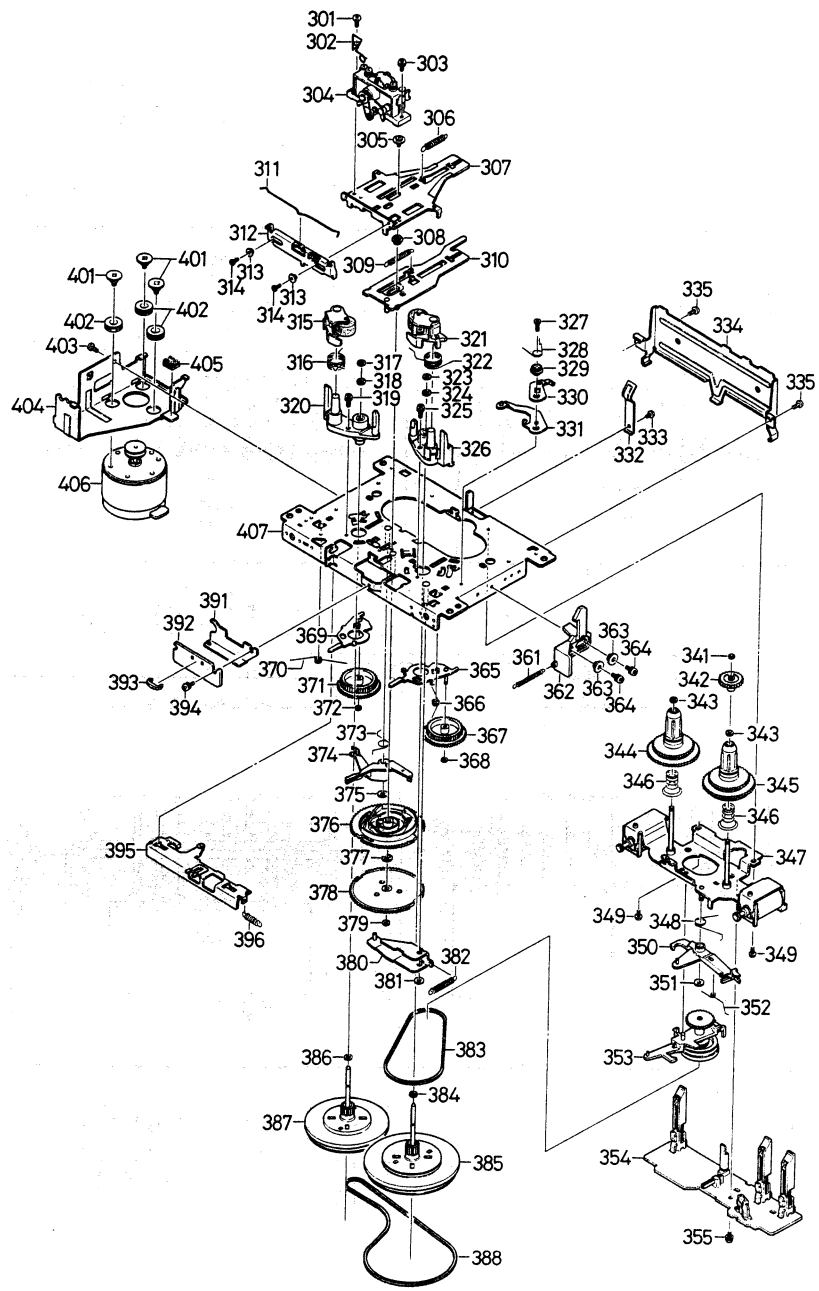

PARTS LIST

TAPE MECHANISM "B" (TM-WCD950RTN)

Ref. No.	Part No.	Description
301	412 032 4800	SPECIAL SCREW, 2X5MM
302	614 206 5105	SPRING, WIRE, CLAMP
303	412 032 2707	SPECIAL SCREW, 2X5MM
304	614 207 6194	ASSY, HEAD, R/P, ROTARY
305	412 032 3001	SPECIAL SCREW, 2X5MM
306	614 206 3286	SPRING, TENS, REV/CUE SPRING
307	614 206 3248	SLIDE, HEAD PANEL (A)
308	614 206 3132	COLLAR, PANEL COLLAR
309	614 206 3293	SPRING, TENS, PANEL SPRING
310	614 206 2821	ASSY, SLIDE, HEAD PANEL (B)
311	614 206 3378	SPRING, WIRE, PINCH ROLLER SPRING
312	614 206 3194	LEVER, CHP LEVER
313	614 206 3118	COLLAR, CHP LEVER COLLAR
314	412 032 2806	SPECIAL SCREW, 1.7X3MM
315	614 207 1557	ASSY, PINCH ROLLER ARM (R)
316	614 206 3361	SPRING, WIRE, P ARM (R)
317	412 027 9803	SPECIAL WASHER, 2.1X3.5X0.5MM
318	412 032 5401	SPECIAL WASHER, 1.55X3.5X0.5MM
319	412 032 3605	SPECIAL SCREW, 2X6MM
320	614 206 2715	ASSY, BRACKET-E, FL METAL ASSY (R)
321	614 206 2784	ASSY, PINCH ROLLER ARM (F)
322	614 206 3354	SPRING, WIREL, P ARM (F)
323	412 032 3506	SPECIAL WASHER, 2.1X3.5X0.5MM
324	412 032 3704	SPECIAL WASHER, 1.8X4X0.5MM
325	412 032 3605	SPECIAL SCREW, 2X6MM
326	614 206 2722	ASSY, BRACKET-E, FLYWHEEL METAL
327	412 032 2400	SPECIAL SCREW, 2MM
328	614 206 3316	SPRING, WIRE, E STOPPER
329	614 206 3095	COLLAR, E STOPPER COLLER
330	614 206 3163	LEVER, E STOPPER A
331	614 206 3156	LEVER, E STOPPER B
332	614 206 3200	PLATE, CASSETTE HOLDER SPRING
333	412 027 2606	SPECIAL SCREW, 2X3MM
334	614 206 3224	SLIDE, SWITCH PROTECTOR
335	412 004 0908	SPECIAL SCREW, 2X4MM
341	412 013 4904	SPECIAL WASHER, 1.2X3X0.25MM
342	614 206 4658	GEAR, FF
343	412 032 3902	SPECIAL WASHER, 1.4X3.2X0.4MM
344	614 207 2158	ASSY, REEL, TAKE-UP (R)
345	614 206 4399	ASSY, REEL, TAKE-UP (F)
346	614 206 3309	SPRING, COMP, BACK TENSION SPRING (R)
347	614 207 6231	ASSY, BRACKET-M, REEL BASE ASSY, WITH SOLENOID
348	614 206 5099	SPRING, WIRE, FR TRIGGER ARM
349	412 004 0908	SPECIAL SCREW, 2X4MM
350	614 206 3149	LEVER, RF TRIGGER ARM
351	412 032 3803	SPECIAL WASHER, 2.1X5X0.4MM
352	614 207 7993	SPRING RF TRIGGER ARM
353	614 206 4436	ASSY, PULLEY, REW/F.FWD CLUTCH
355	412 032 2509	SPECIAL SCREW, 2X5MM
361	614 206 3262	SPRING, TENS, E SLIDE LEVER
362	614 206 3217	SLIDE, E SLIDE LEVER
363	614 206 3125	COLLAR
364	412 032 2509	SPECIAL SCREW, 2X5MM
365	614 207 2882	ASSY, LEVER, T GEAR ARM (F)
366	614 206 3323	SPRING, WIRE, TAKE-UP GEAR ARM (F)
367	614 206 4207	GEAR, TAKE-UP
368	412 013 4904	SPECIAL WASHER, P WASHER CUT, 1.2X3X0.25MM
369	614 206 4467	ASSY, LEVER, T GEAR ARM (R)
370	614 206 3330	SPRING, WIRE, TAKE-UP GEAR ARM (R)
371	614 206 4207	GEAR, TAKE-UP
372	412 013 4904	SPECIAL WASHER, P WASHER CUT, 1.2X3X0.25MM
373	614 206 3347	SPRING, WIRE, M TRIGGER ARM
374	614 206 3170	LEVER, M TRIGGER ARM
375	412 032 3308	SPECIAL WASHER, 2.1X5X0.4MM
376	614 206 3002	GEAR, MAIN GEAR
377	412 032 3100	SPECIAL WASHER, E RING 2MM
378	614 206 3019	GEAR, RF CAM GEAR
379	412 032 3209	SPECIAL WASHER, 1.55X3.5X0.5MM
380	614 206 2807	ASSY, LEVER, PANEL KICK LEVER
381	412 032 3308	SPECIAL WASHER, 2.1X5X0.4MM
382	614 206 5044	SPRING, TENS, PANEL KICK LEVER
383	614 206 4849	BELT, FLAT, REW/F.FWD BELT
384	412 032 4701	SPECIAL WASHER, 2.3X3.8X0.3MM
385	614 206 2777	ASSY, FLYWHEEL (F)
386	412 032 4602	SPECIAL WASHER, 2.3X3.8X0.3MM
387	614 206 2760	ASSY, FLYWHEEL (R)
388	614 206 3064	BELT, FLAT, MAIN BELT
391	614 206 5006	PLATE, SHIELD PLATE
392	614 206 1954	PCB, ROTARY HEAD P.C.BOARD, RELAY
393	614 206 2975	FIXER, WIRE CLAMP
394	412 032 2905	SPECIAL SCREW, 2X5MM
395	614 206 2814	ASSY, SLIDE, CHANGE SLIDE LEVER
396	614 206 3279	SPRING, TENS, CHANGE SLIDE LEVER
401	412 032 4008	SPECIAL SCREW, MOTOR COLLAR
402	614 206 2944	CUSHION, RUBBER, MOTOR
403	412 004 0908	SPECIAL SCREW, 2X4MM
404	614 206 2890	BRACKET-MOTOR
405	614 206 2951	CUSHION, BRACKET MOTOR
406	614 207 1298	COMMUTATE MOTOR ASSY
407	614 206 2708	ASSY, CHASSIS

MECHANISM SWITCH P.C.BOARD ASSY

Ref. No.	Part No.	Description
354	614 207 6224	ASSY, PCB, MECHANISM SWITCH
	614 206 3392	PCB, MECHANISM SWITCH
	614 206 3538	SWITCH, LEAF, CASSETTE DIRECTION S644, UN-RECORDING SENSOR, S641,S648
	614 206 2968	HOLDER, IC PROTECTOR
	409 077 4407	IC LB9050, HALL IC, IC 629
	614 206 5112	SWITCH, LEAF, PLAY, S645
	614 206 5129	SWITCH, LEAF, F.FWD/REW, S646
	614 017 3895	PLUG, 10P, CN36
	407 004 9105	DIODE DSF10C, D3, D4

BLOCK DIAGRAM (AMP.)

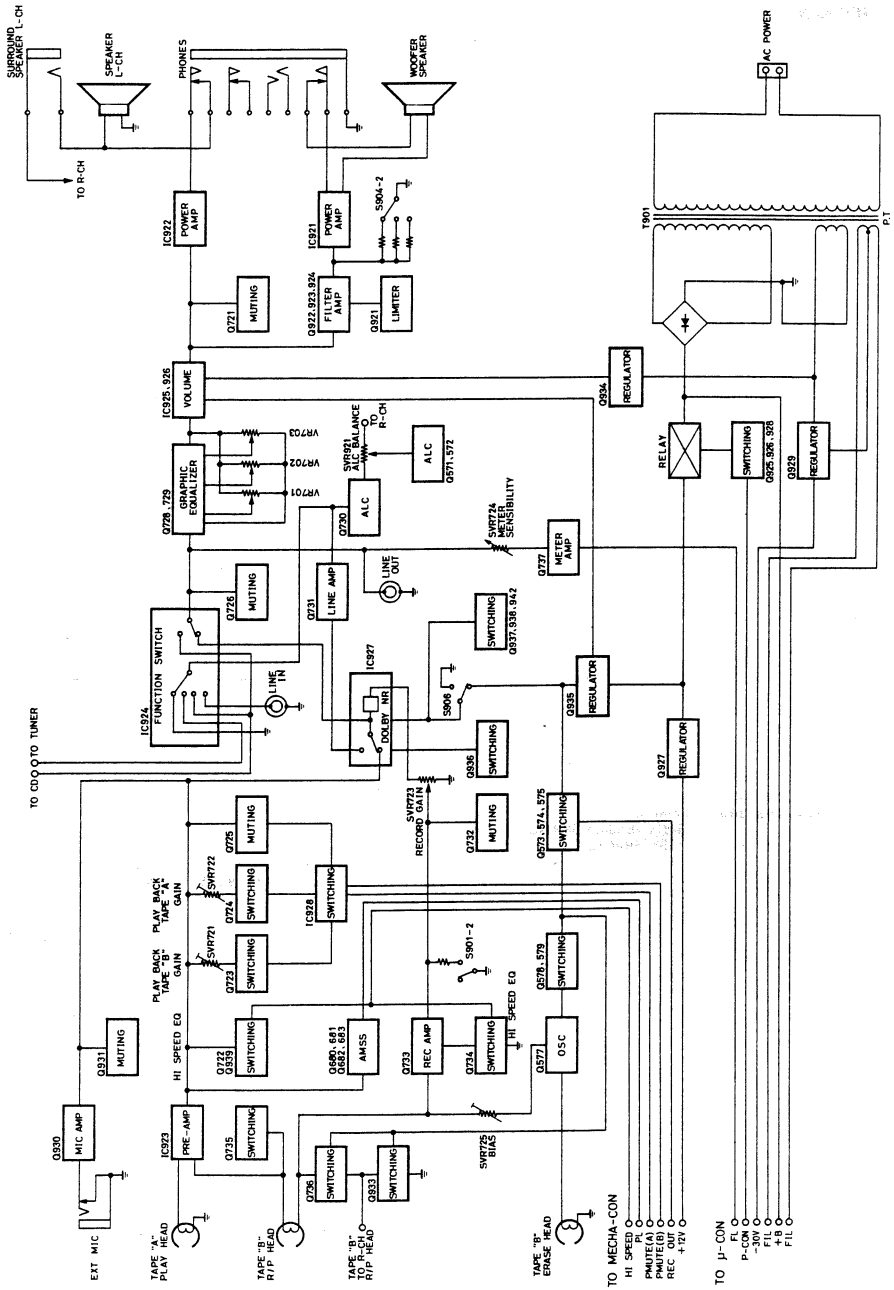

BLOCK DIAGRAM (TAPE MECHANISM CONTROL)

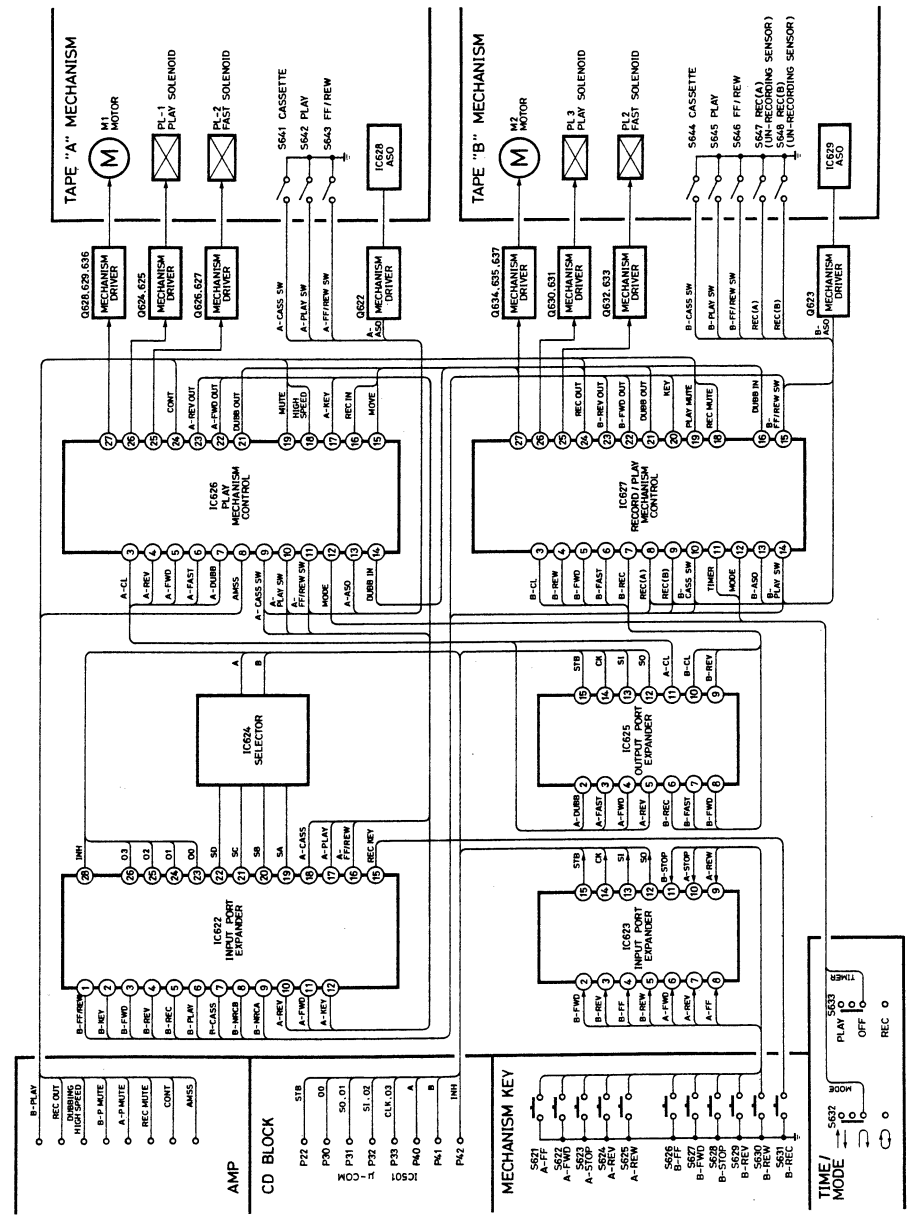

BLOCK DIAGRAM (CD)

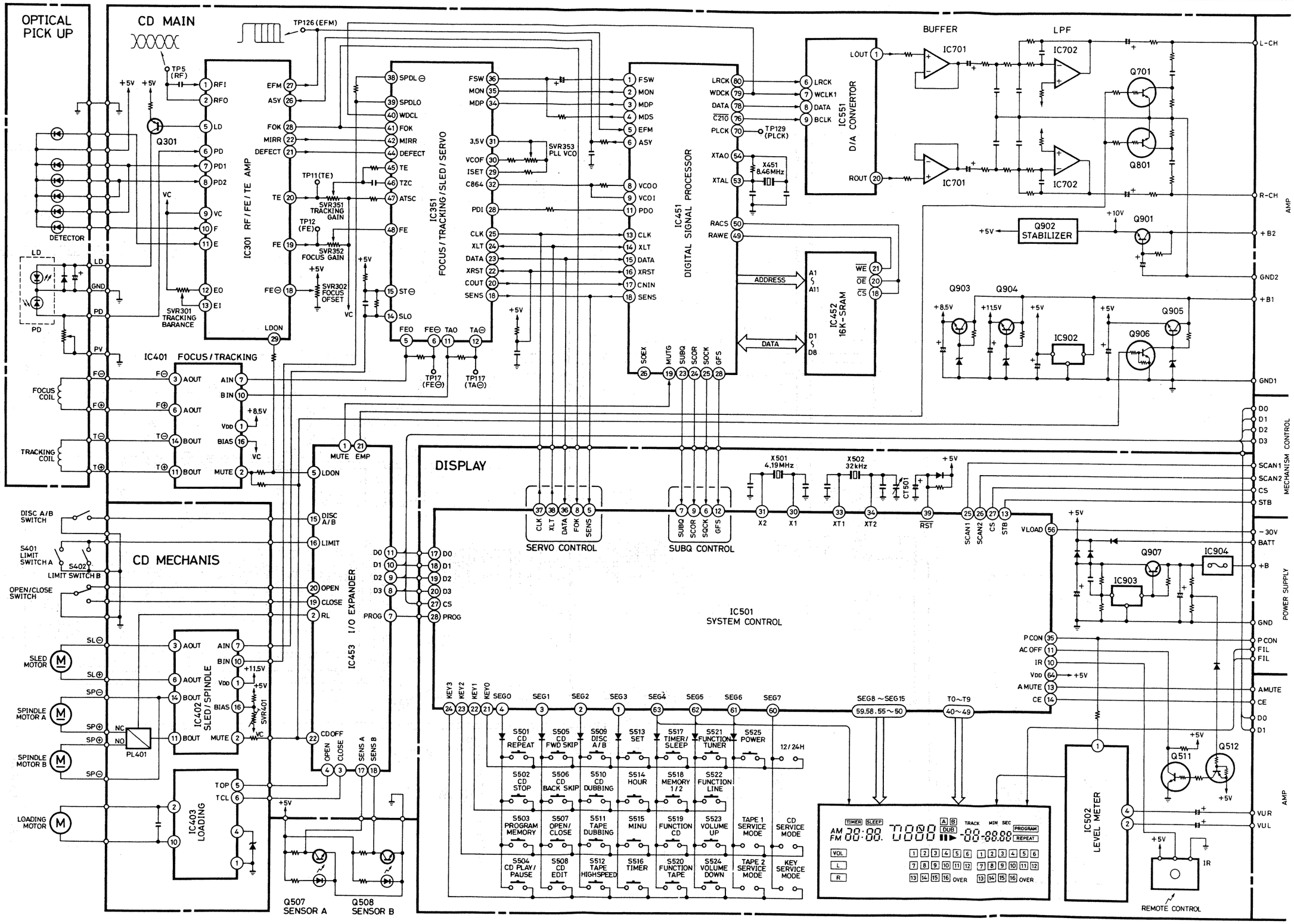

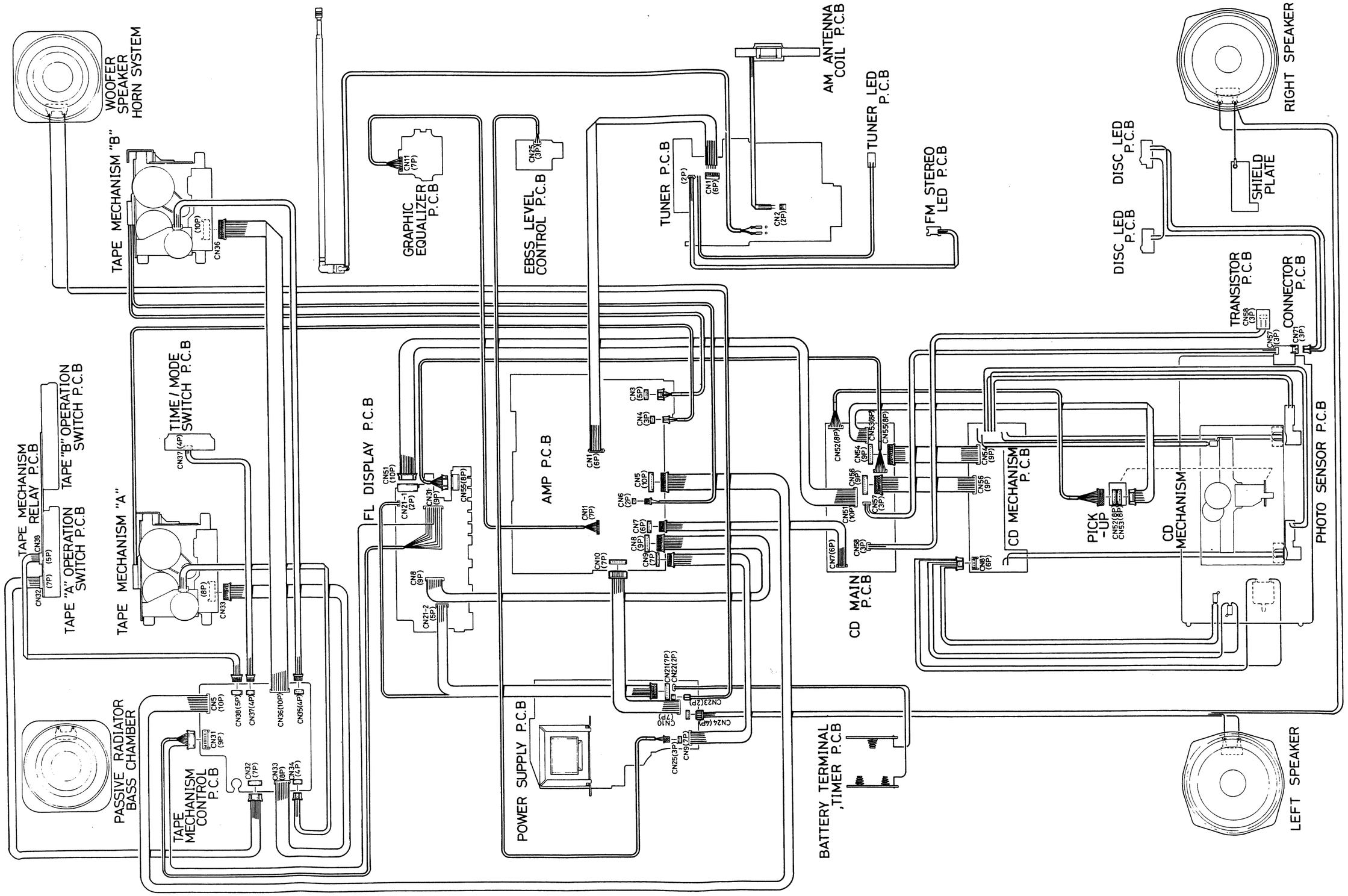
WOOFER SPEAKER HORN SYSTEM
TAPE MECHANISM "B"
CN36
(10P)
GRAPHIC EQUALIZER P.C.B
CN11 (7P)
EBSS LEVEL CONTROL P.C.B
CN25 (3P)
TUNER P.C.B
(2P)
CN17 (6P)
CN2 (2P)
AM ANTENNA COIL P.C.B
TUNER LED P.C.B
FM STEREO LED P.C.B
RIGHT SPEAKER
DISC LED P.C.B
DISC LED P.C.B
SHIELD PLATE
TRANSISTOR P.C.B
CN58 (3P)
CN57 (3P)
CONNECTOR P.C.B
CN71 (3P)
TAPE MECHANISM RELAY P.C.B
TAPE "B" OPERATION SWITCH P.C.B
TAPE "A" OPERATION SWITCH P.C.B
CN38 (5P)
CN32 (7P)
TIME / MODE SWITCH P.C.B
CN37 (4P)
TAPE MECHANISM "A"
(6P)
CN33
FL DISPLAY P.C.B
CN51 (10P)
CN21-1 (2P)
CN31 (9P)
CN55 (8P)
CN8 (9P)
CN21-2 (6P)
AMP P.C.B
CN3 (5P)
CN4 (3P)
CN1 (6P)
CN5 (10P)
CN6 (2P)
CN11 (7P)
CN7 (6P)
CN8 (9P)
CN9 (7P)
CN10 (7P)
CN52 (8P)
CN54 (9P)
CN53 (8P)
CN55 (8P)
CN56 (9P)
CN57 (3P)
CN5 (10P)
CN58 (3P)
CN7 (6P)
CN56 (9P)
CN57 (9P)
CN61 (6P)
CD MECHANISM P.C.B
PICK -UP
CN52 (8P)
CN53 (8P)
CD MECHANISM
PHOTO SENSOR P.C.B
CD MAIN P.C.B
CN21 (7P)
CN22 (2P)
CN23 (2P)
CN24 (4P)
CN10 (7P)
CN25 (3P)
CN9 (7P)
POWER SUPPLY P.C.B
BATTERY TERMINAL ,TIMER P.C.B
CN5 (10P)
CN38 (5P)
CN37 (4P)
CN36 (10P)
CN35 (4P)
CN31 (9P)
CN32 (7P)
CN33 (8P)
CN34 (4P)
TAPE MECHANISM CONTROL P.C.B
PASSIVE RADIATOR BASS CHAMBER
LEFT SPEAKER

SCHEMATIC DIAGRAM (TUNER)

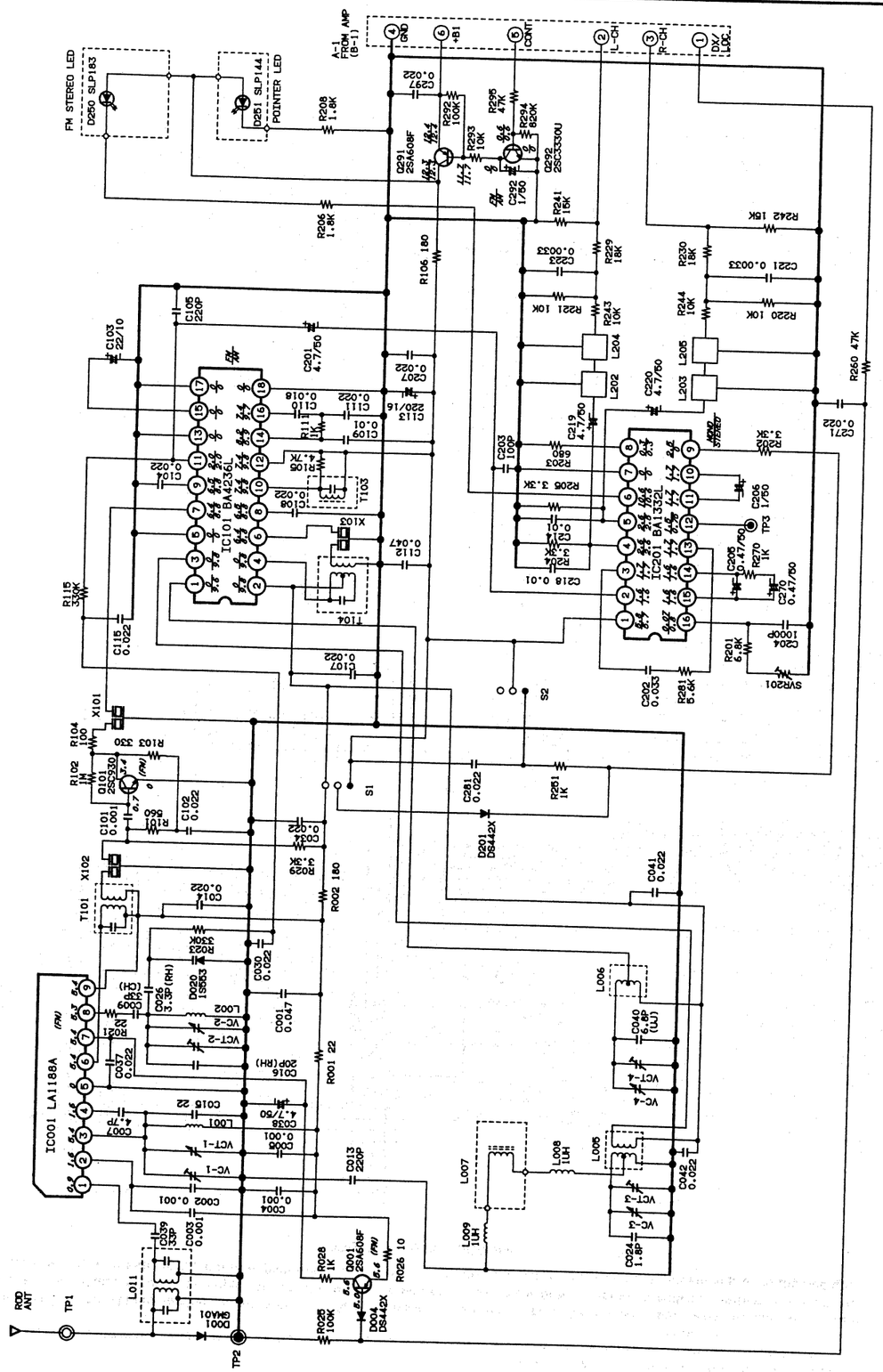

WIRING DIAGRAM (TUNER)

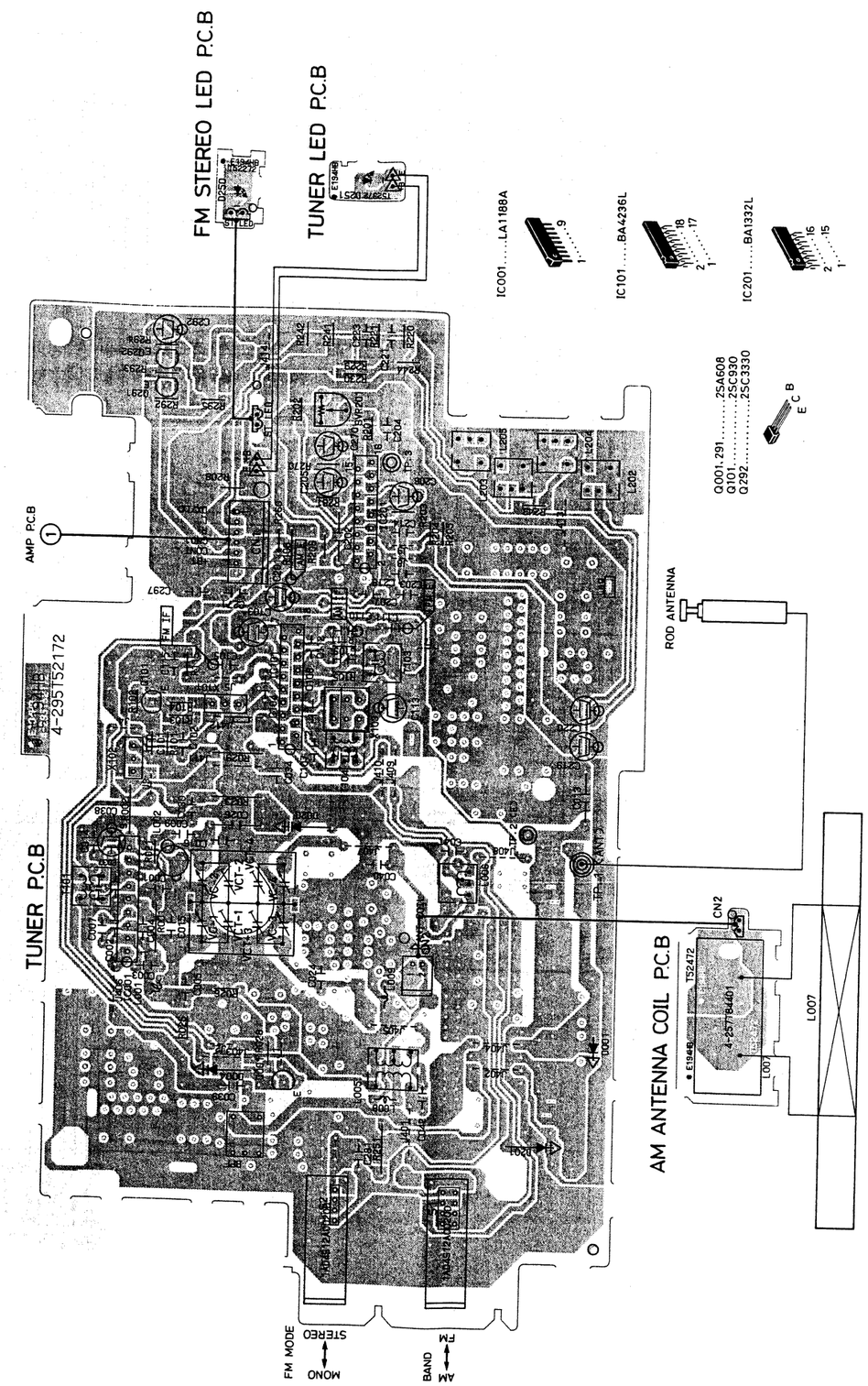

SCHEMATIC DIAGRAM (AMP. ①)

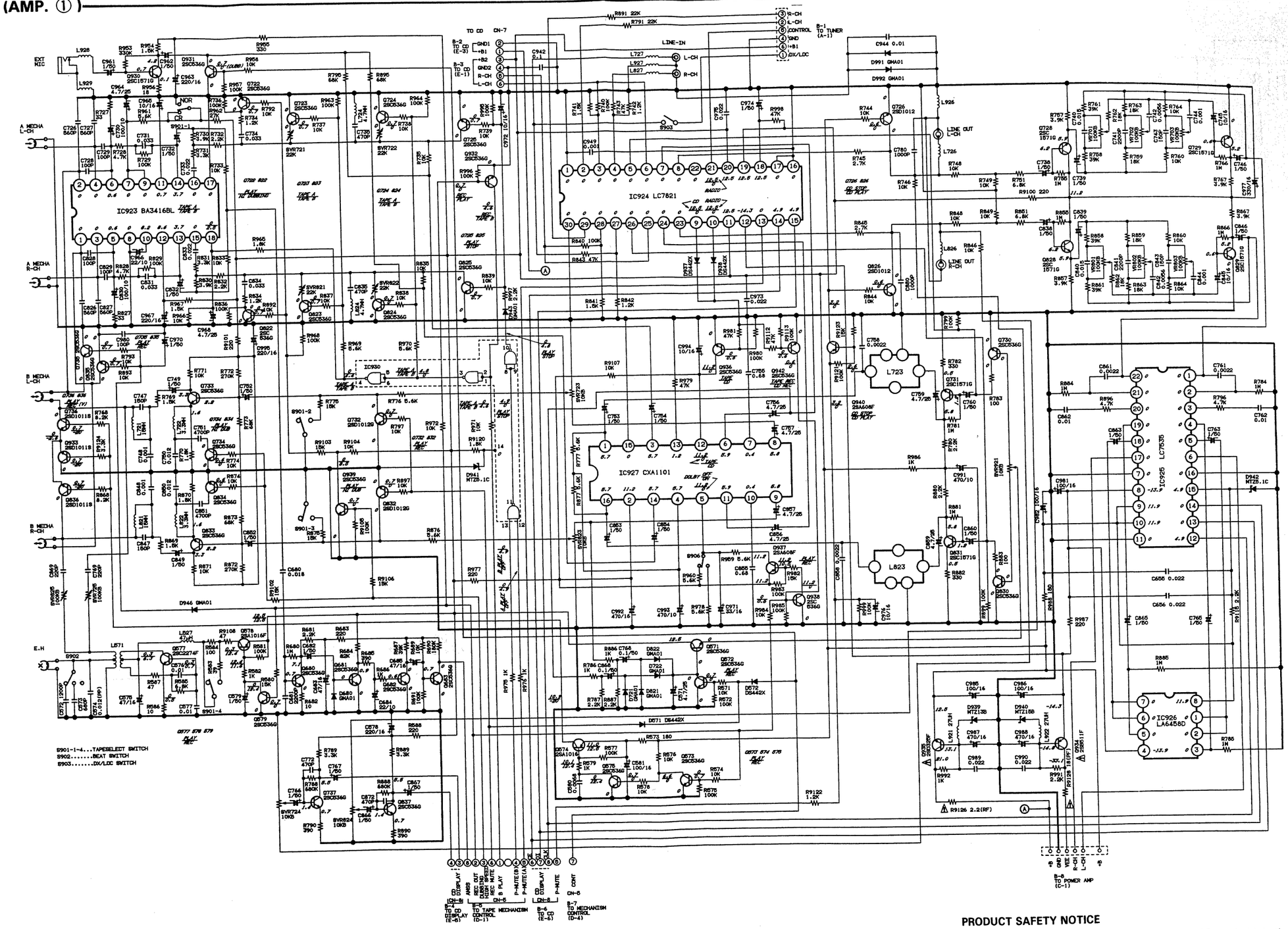

PRODUCT SAFETY NOTICE

Each percaution in this manual should be followed during servicing. Components identifled with the IEC symbol⚠ in the parts list and the schematic diagram designate components in which safety can be of special significance. When replacing a component identified with ⚠, use only the replacement parts designated, or parts with the same ratings of resistance, wattage or voltage that are designated in the parts list in this manual.

Leakage-current or resistance measurements must be made to determine that exposed parts are acceptably insulated from the supply circuit before erturning the product to the customer.

WIRING DIAGRAM (AMP. ①)

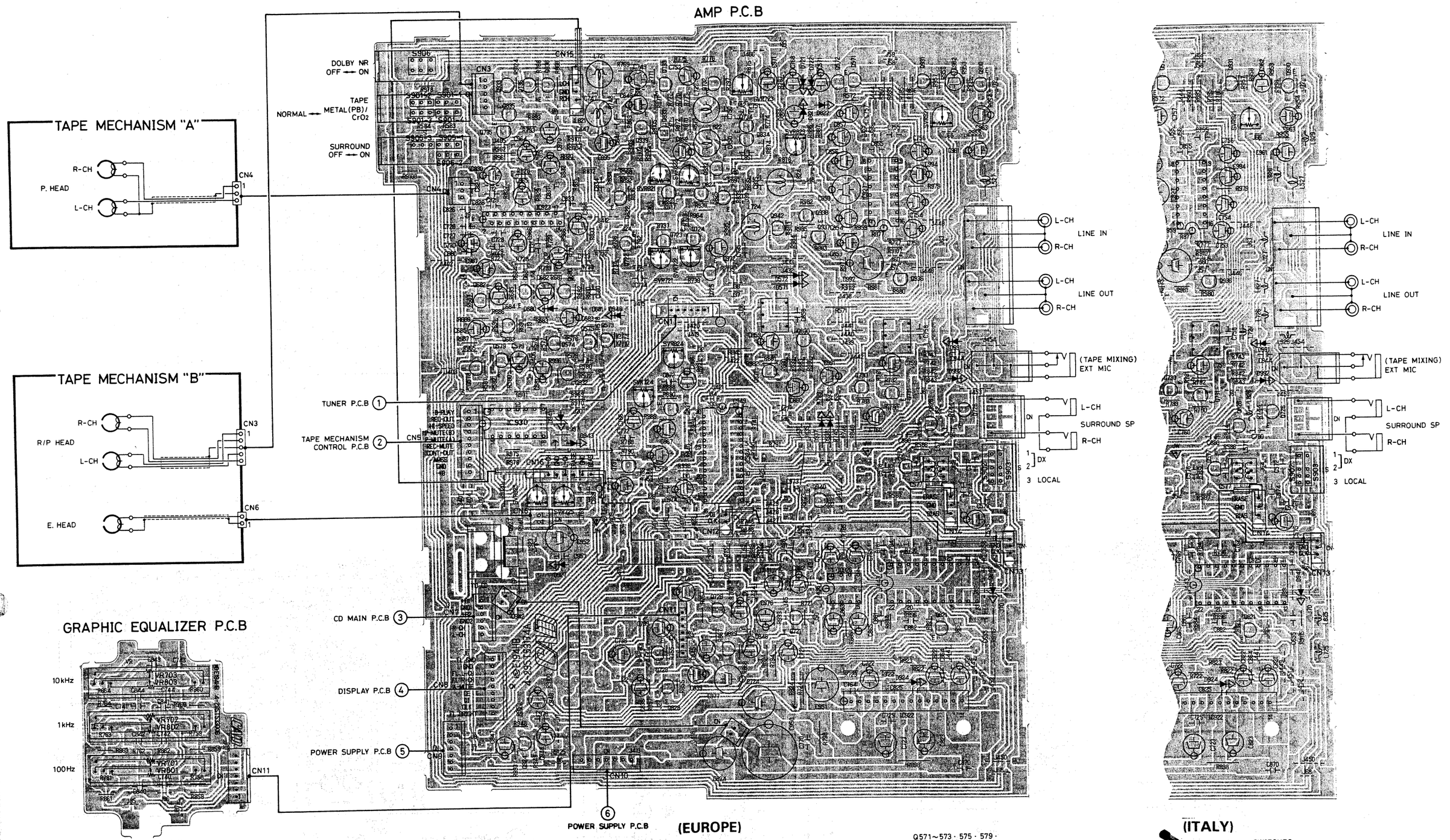

IC922.....LA4508

IC924.....LC7821

IC923.....BA3416BL

IC925.....LC7535

IC926.....LA6458D

IC927.....CXA1101

IC930.....LC4011B

ICP

Q574 · 578.....2SA1016
Q577.....2SC2274
Q736 · 836 · 933 .....2SD1011
Q728 · 729 · 731 · 828 · 829 · 831 · 924 · 930 .....2SC1571

Q571~573 · 575 · 579 · 680~683 · 721~725 · 730 · 733~735 · 737 · 821~825 · 830 · 833~835 · 837 · 931 · 932 · 938 · 939 · 942 · 936 .....2SC536
Q726 · 732 · 826 · 832 · 2SD1012
Q937 · 940.....2SA608

Q927....2SD325

SWITCHES
S901-1~4....TAPE SELECT SWITCH (NORMAL/METAL(PB)·CrO2)
S902.....BEAT CANCEL SWITCH (1/2/3)
S903.....DX/LOC SWITCH (DX/LOC)
S905-1-3.....SURROUND SWITCH (ON/OFF)
S906.....DOLBY NR SWITCH (ON/OFF)

SCHEMATIC DIAGRAM (TAPE MECHANISM CONTROL)

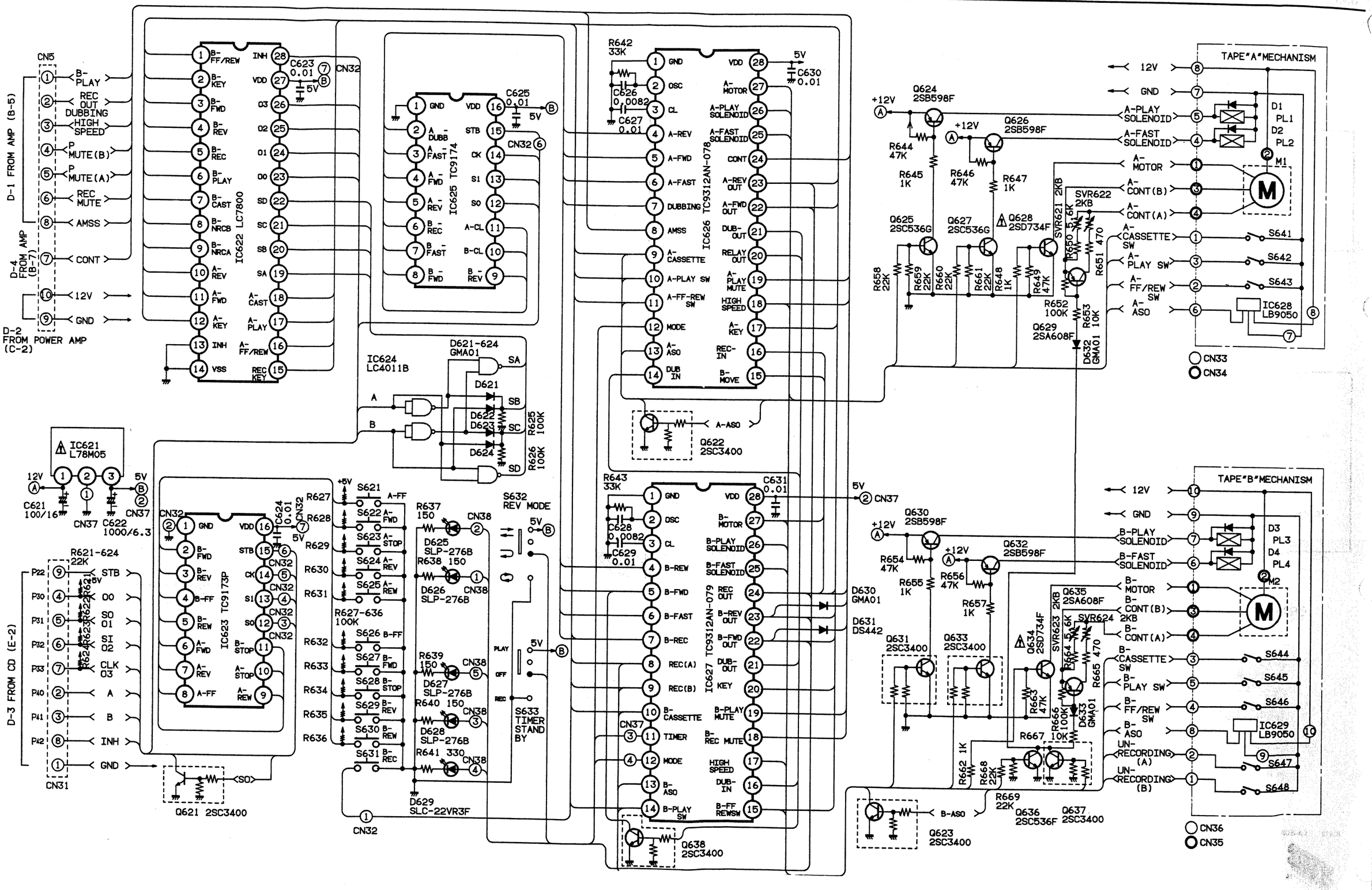

WIRING DIAGRAM (TAPE MECHANISM CONTROL)

SWITCHES
S621 ..... A-FF SWITCH
S622 ..... A-FWD SWITCH
S623 ..... A-STOP SWITCH
S624 ..... A-REV SWITCH
S625 ..... A-REW SWITCH
S626 ..... B-FF SWITCH
S627 ..... B-FWD SWITCH
S628 ..... B-STOP SWITCH
S629 ..... B-REV SWITCH
S630 ..... B-REW SWITCH
S631 ..... B-REC SWITCH
S632 ..... REVERSE MODE/CONT. PLAY SWITCH
S633 ..... TAPE B TIMER STANDBY SWITCH
S641 ..... A-CASSETTE SWITCH
S642 ..... A-PLAY SWITCH
S643 ..... A-FF/REW SWITCH
S644 ..... B-CASSETTE SWITCH
S645 ..... B-PLAY SWITCH
S646 ..... B-FF/REW SWITCH
S647 ..... REC(A) SWITCH
S648 ..... REC(B) SWITCH

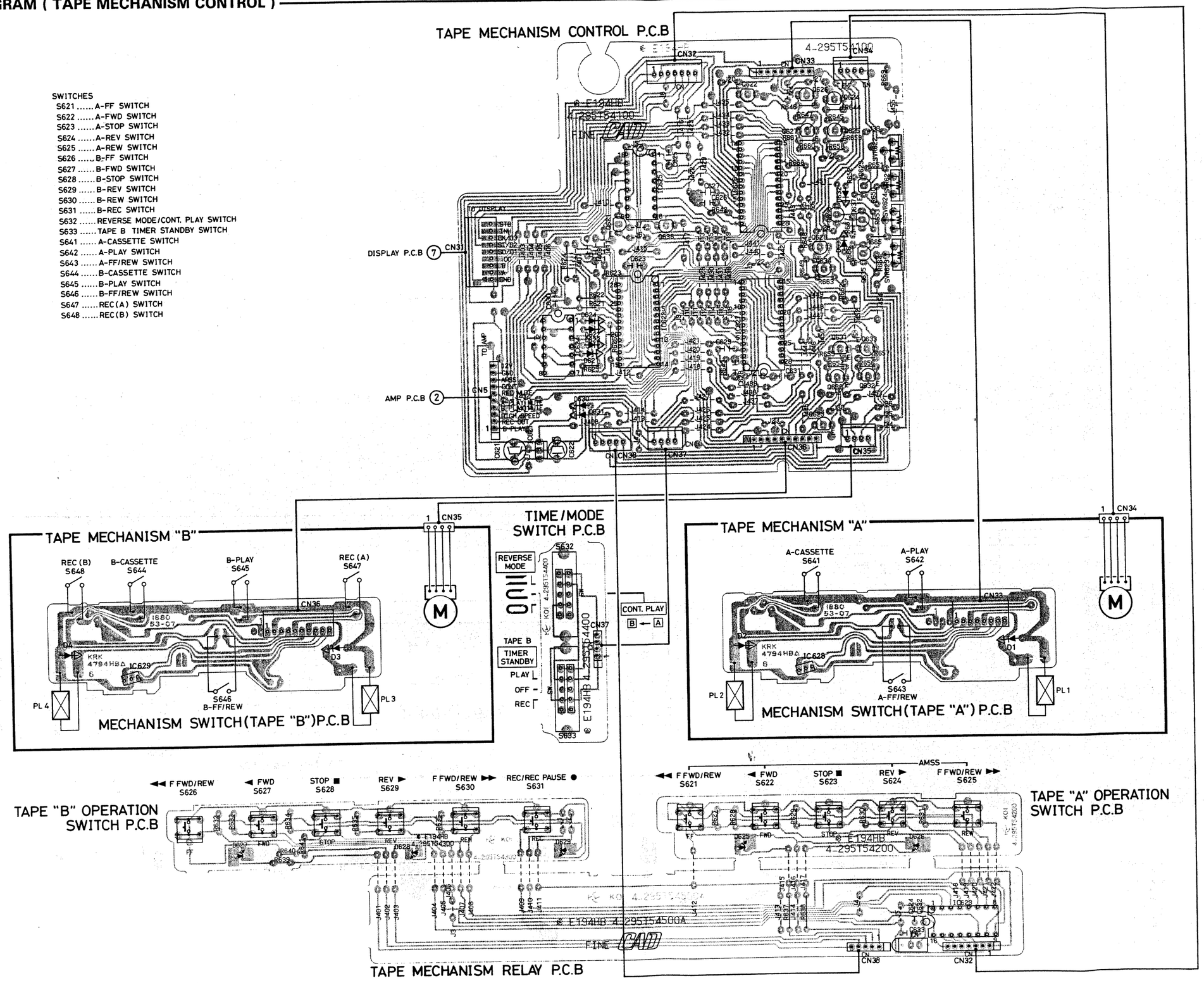

IC621 ..... L78M05

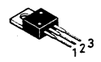

IC622 ..... LC7800

IC623 ..... TC9173P
IC625 ..... TC9174

IC624 ..... LC4011B

IC626 ..... TC9312AN-078
IC627 ..... TC9312AN-079

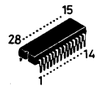

IC628 · 629 ..... LB9050

Q621 · 623 · 631 · 633 · 637 · 638 ..... 2SC3400

Q624 · 626 · 630 · 632 ..... 2SB598
Q625 · 627 · 636 ..... 2SC536
Q628 · 634 ..... 2SD734
Q629 · 635 ..... 2SA608

CD MAIN P.C.B

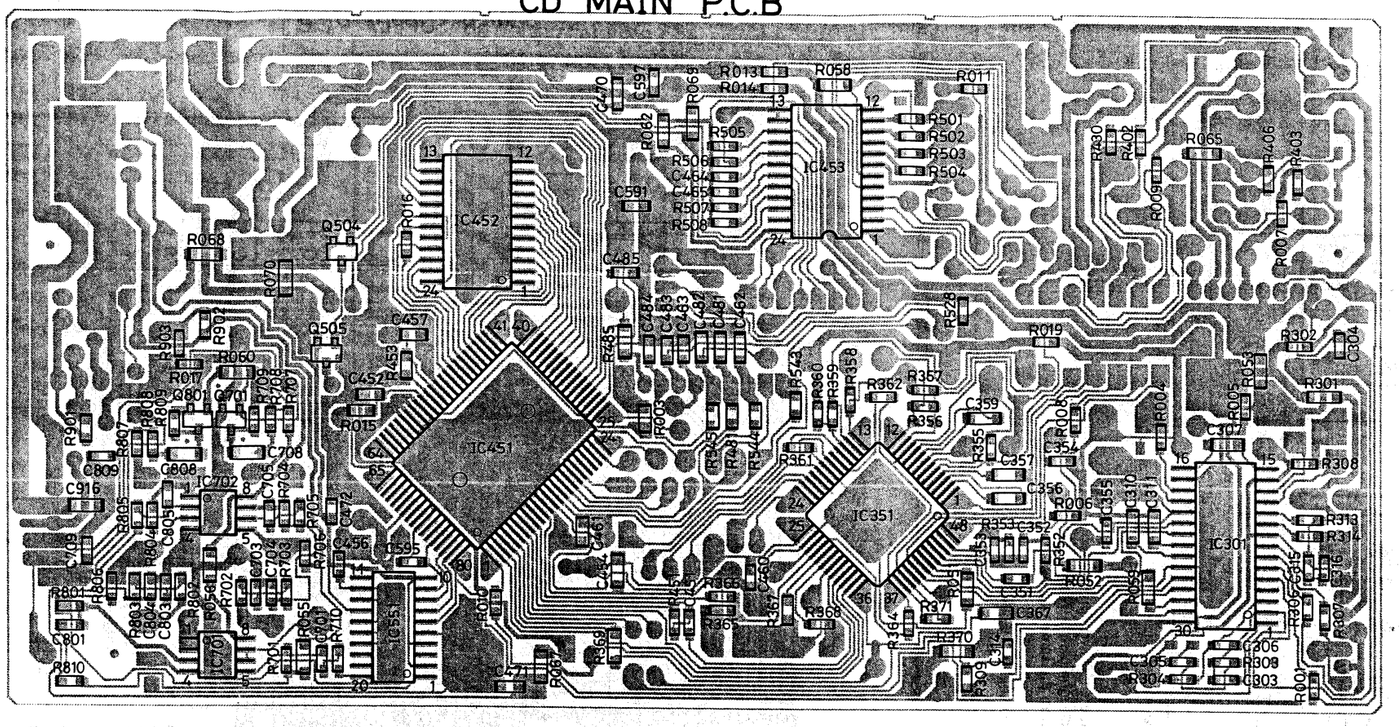

IC301.....CXA1081M

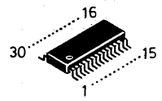

IC351.....CXA1082AQ

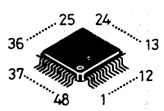

IC451.....CXD1130Q

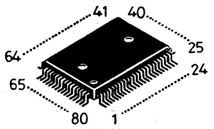

IC452.....CXK5816M

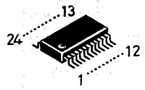

IC453.....μPD82C43G

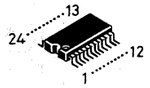

IC551.....LC7880

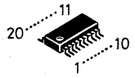

IC701.702...NJM4558

Q504.....DTC124
Q505.....DTA124
Q701.801....DTC114TK

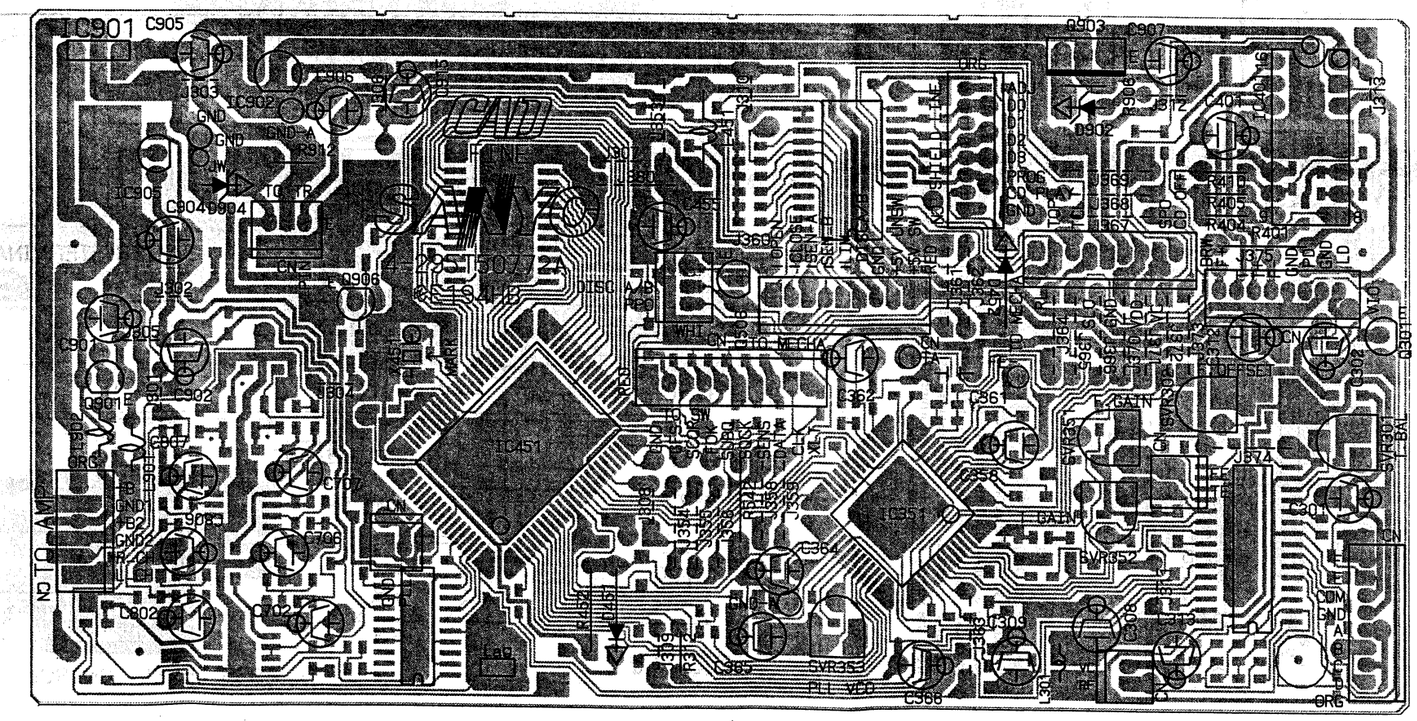

WIRING DIAGRAM (CD ①)

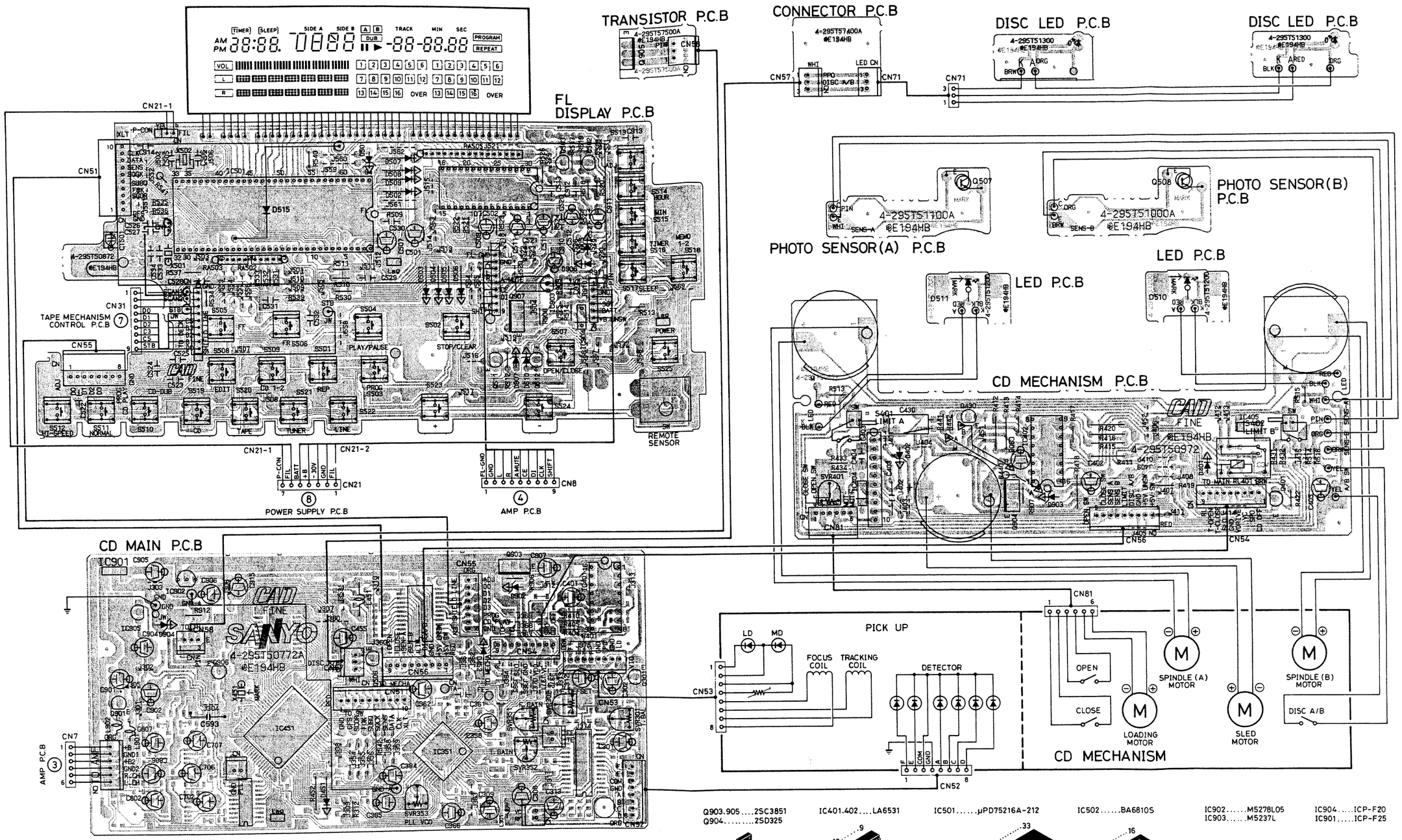

SWITCHES

S501.....REPEAT
S502.....STOP/CLEAR
S503.....MEMORY
S504.....PLAY/PAUSE
S505.....SKIP/SEARCH ▶▶|
S506.....SKIP/SEARCH |◀◀
S507.....OPEN/CLOCE
S508.....EDIT
S509.....DISC*A/B
S510.....CD DUBBING

S511.....TAPE NORMAL
S512.....TAPE HIGH SPEED
S513.....MODE/SET
S514.....OPERATION
S515.....HOUR
S516.....MINUTE
S517.....TIMER SELECT
S518.....TIMER I/II
S519.....FUNCTION CD
S520.....FUNCTION TAPE

S521.....FUNCTION TUNER
S522.....FUNCTION LINE
S523.....VOLUME UP
S524.....VOLUME DOWN
S525.....POWER

S401.....LIMIT A
S402.....LIMIT B

Q301.....2SB598
Q901.....2SC536

Q401.....2SD1012
Q502.503....2SA608

Q430.....DTA114
Q511.....DTC114T
Q512.....DTA124E
Q506.906....DTC124ES

Q903.905....2SC3851
Q904.....2SD325

Q907.....2SB511

IC401.402....LA6531

IC403.....LB1645N

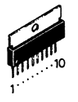

IC501.....μPD75216A-212

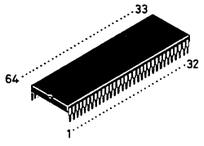

IC502.....BA6810S

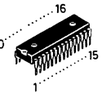

IC902.....M5278L05
IC903.....M5237L

IC904.....ICP-F20
IC901.....ICP-F25

SCHEMATIC DIAGRAM (AMP. ②)

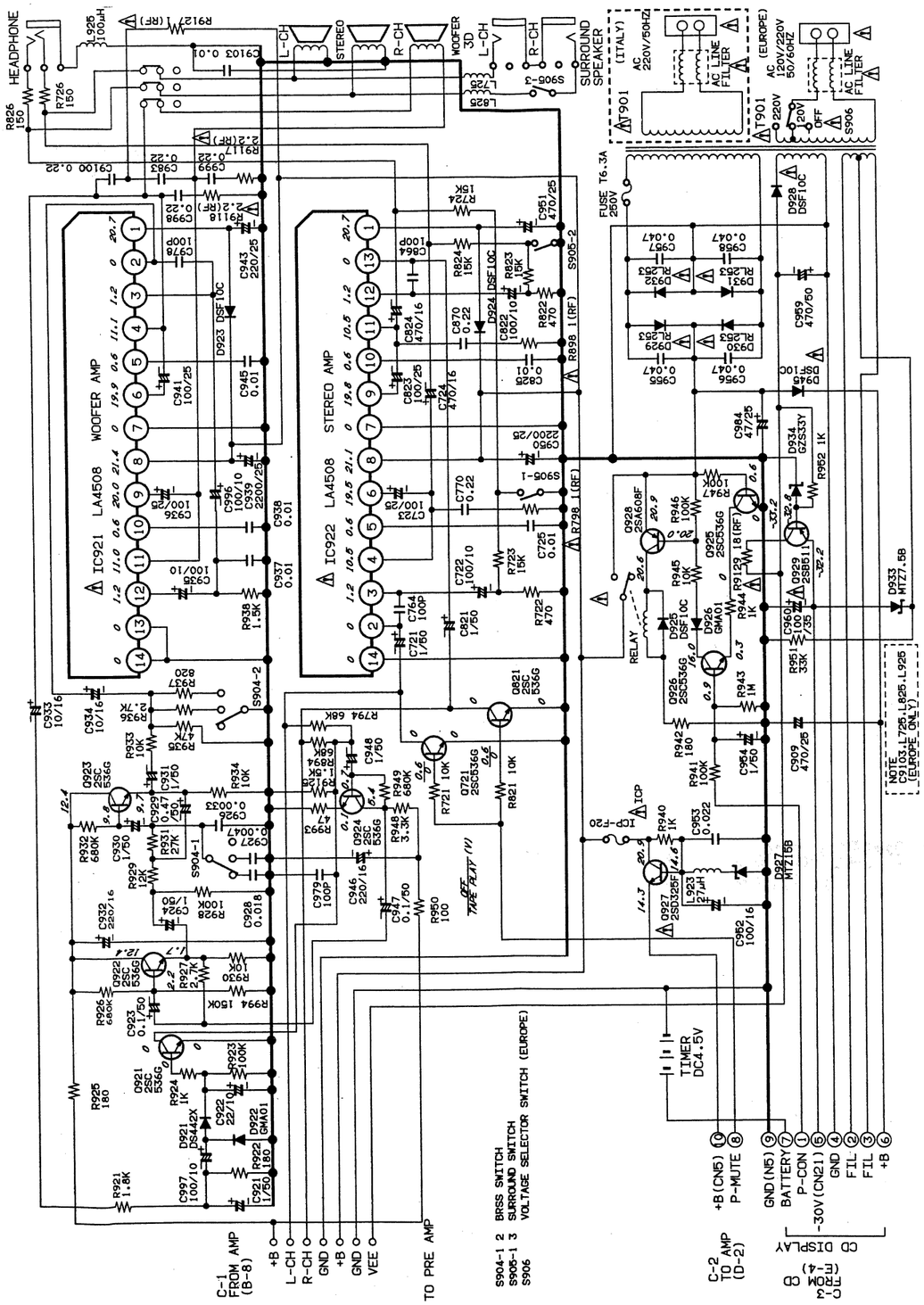

PRODUCT SAFETY NOTICE

Each percaution in this manual should be followed during servicing. Components identified with the IEC symbol⚠ in the parts list and the schematic diagram designate components in which safety can be of special significance. When replacing a component identified with ⚠, use only the replacement parts designated, or parts with the same ratings of resistance, wattage or voltage that are designated in the parts list in this manual.
Leakage-current or resistance measurements must be made to determine that exposed parts are acceptably insulated from the supply circuit before erturning the product to the customer.

WIRING DIAGRAM (AMP ②) (EUROPE)

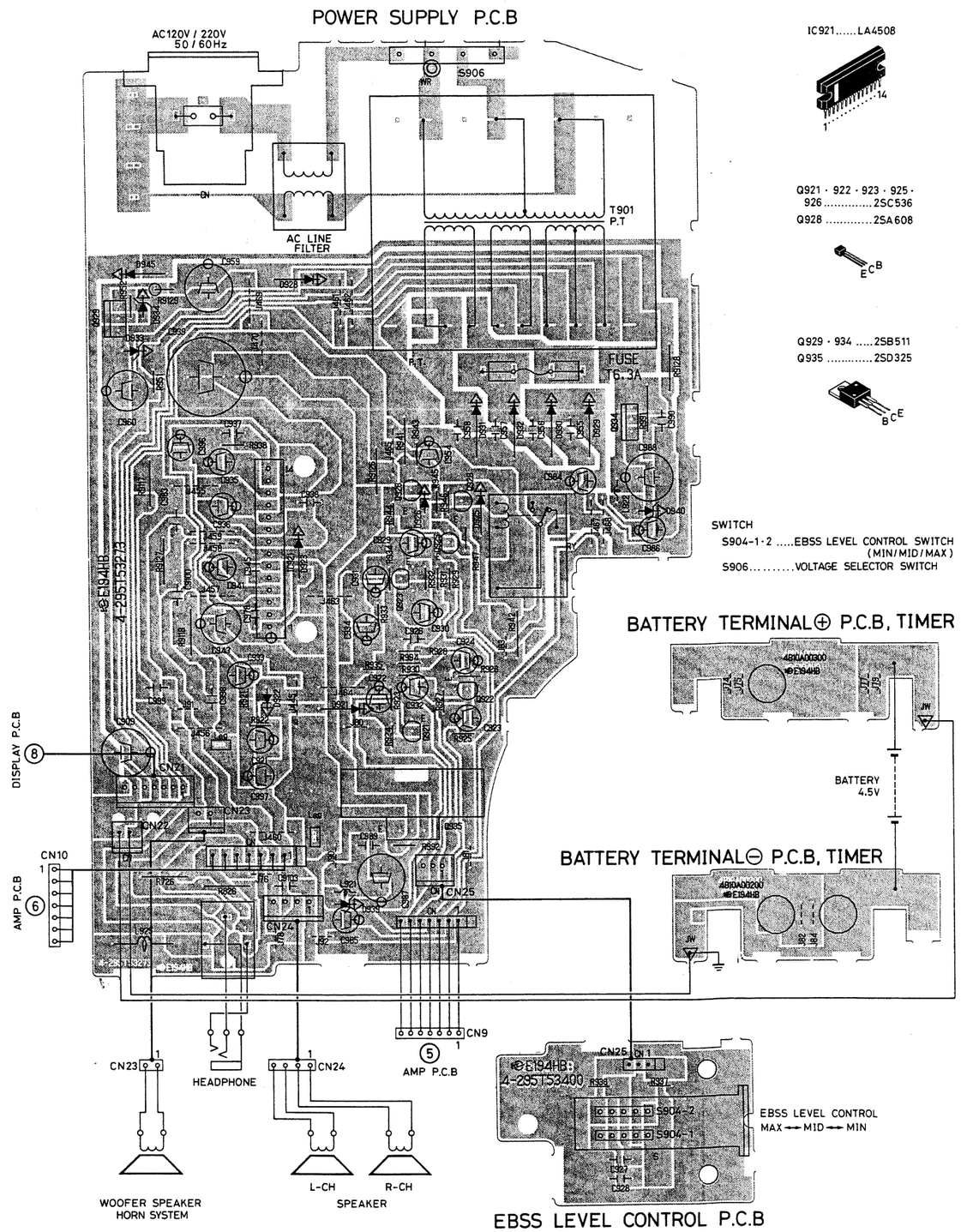

WIRING DIAGRAM (AMP ②) (ITALY)

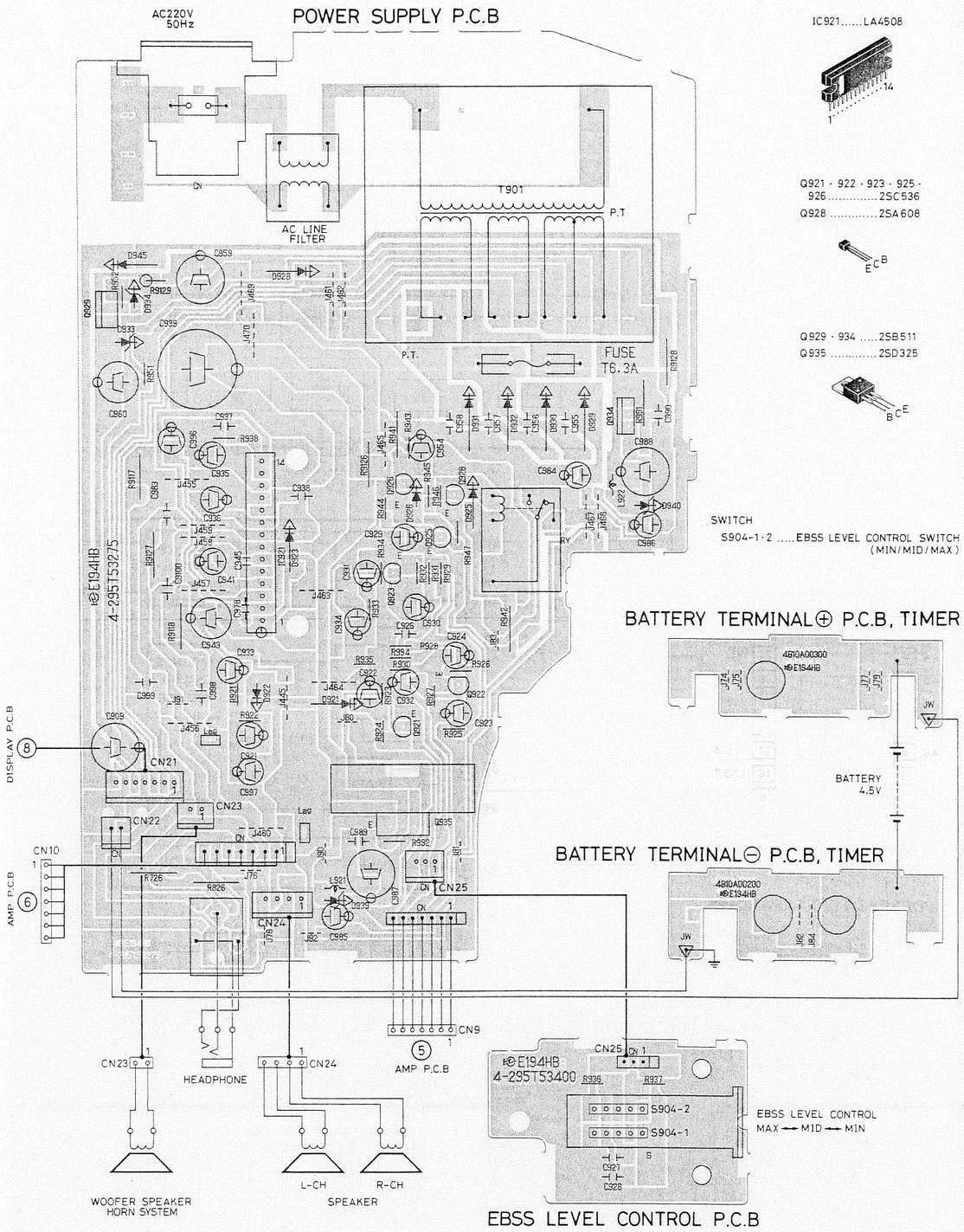

SCHEMATIC DIAGRAM (REMOTE CONTROL)

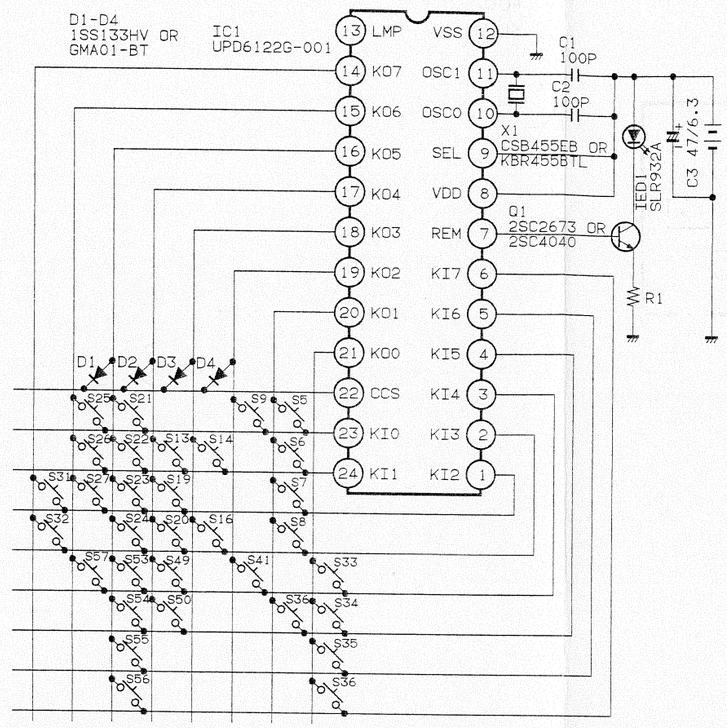

	FUNCTION	D0	D1	D2	D3	D4	D5	D6	D7
S5	■	0	0	1	0	0	0	0	0
S6	MEMORY	1	0	1	0	0	0	0	0
S7	▶II	0	1	1	0	0	0	0	0
S8	▶▶I	1	1	1	0	0	0	0	0
S9	I◀◀	0	0	0	1	0	0	0	0
S14	OPEN/CLOSE	1	0	1	1	0	0	0	0
S16	DISK A→B	1	1	1	1	0	0	0	0
S18	1	1	0	0	0	1	0	0	0
S19	2	0	1	0	0	1	0	0	0
S20	3	1	1	0	0	1	0	0	0
S21	4	0	0	1	0	1	0	0	0
S22	5	1	0	1	0	1	0	0	0
S23	6	0	1	1	0	1	0	0	0
S24	7	1	1	1	0	1	0	0	0
S25	8	0	0	0	1	1	0	0	0
S26	9	1	0	0	1	1	0	0	0
S27	+10	0	1	0	1	1	0	0	0
S31	0	0	1	1	1	1	0	0	0
S32	TAPE CONTROL ◀	1	1	1	1	1	0	0	0
S33	POWER	0	0	0	0	0	0	1	0
S34	VOLUME UP	1	0	0	0	0	0	1	0
S35	VOLUME DOWN	0	1	0	0	0	0	1	0
S36	MUTE	1	1	0	0	0	0	1	0
S38	LINE	1	0	1	0	0	0	1	0
S41	TIMER/SLEEP	0	0	0	1	0	0	1	0
S49	TUNER	0	0	0	0	1	0	1	0
S50	TAPE CONTROL ■	1	0	0	0	1	0	1	0
S53	TAPE CONTROL ▶	0	0	1	0	1	0	1	0
S54	TAPE CONTROL ▶▶	1	0	1	0	1	0	1	0
S55	TAPE CONTROL ◀◀	0	1	1	0	1	0	1	0
S56	TAPE CONTROL ●	1	1	1	0	1	0	1	0
S57	TAPE A→B	0	0	0	1	1	0	1	0
	CUSTOM	0	0	1	1	1	1	0	0

WIRING DIAGRAM (REMOTE CONTROL)

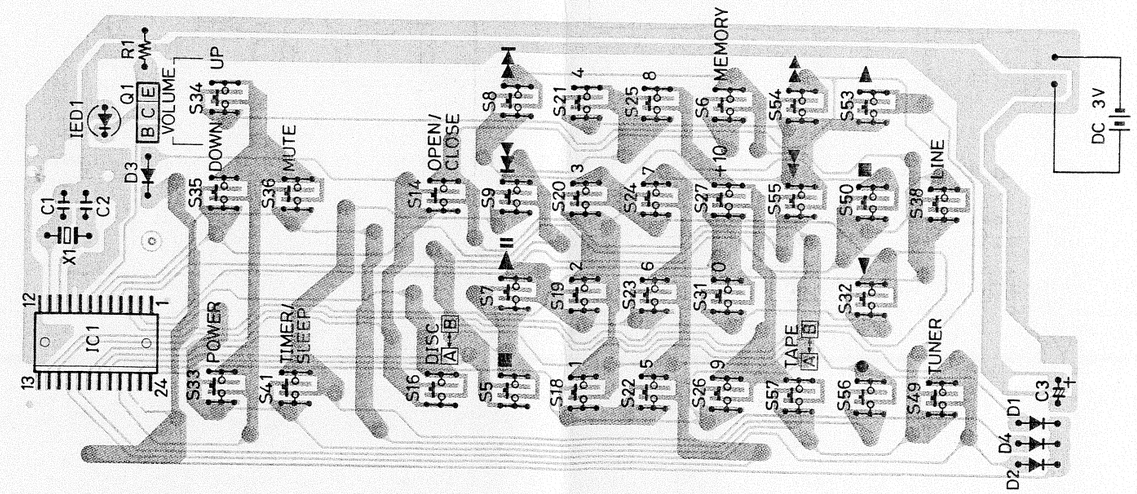

IC BLOCK DIAGRAM ①

IC001 LA1188SS
(FM FRONT END)

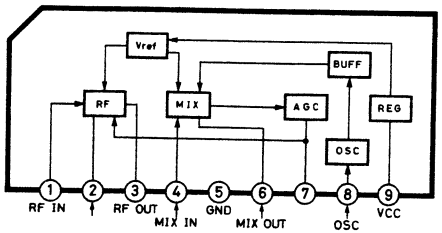

IC401, IC402 LA6531
(FOCUS/TRACKING COIL DRIVER)
(SLED/SPINDLE MOTOR DRIVER)

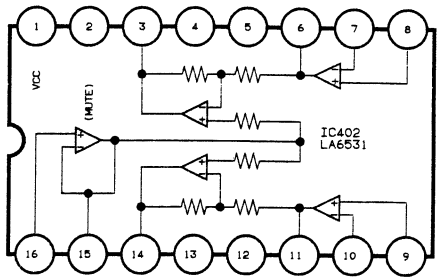

IC101 BA4236L
(FM/AM IF & DETECTOR)

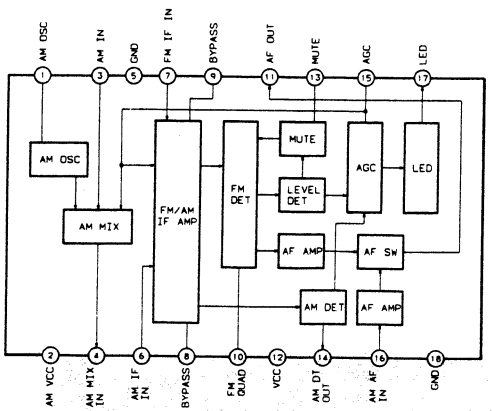

IC403 LB1645
(TAPE MECHANISM MOTOR DRIVER)

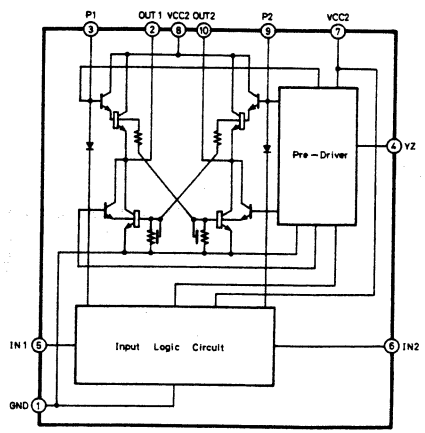

Input		Output		Action
IN1	IN2	OUT1	OUT2	
0	0	0	0	Brake
1	0	1	0	Normal (Reverse) Rotary
0	1	0	1	Reverse (Normal) Rotary
1	1	0	0	Brake

IC201 BA1332L (FM MPX)

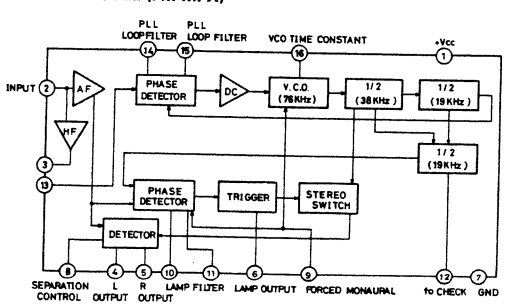

IC BLOCK DIAGRAM ②

IC451 CXD1130Q
(DIGITAL SIGNAL PROCESSOR OF CD)

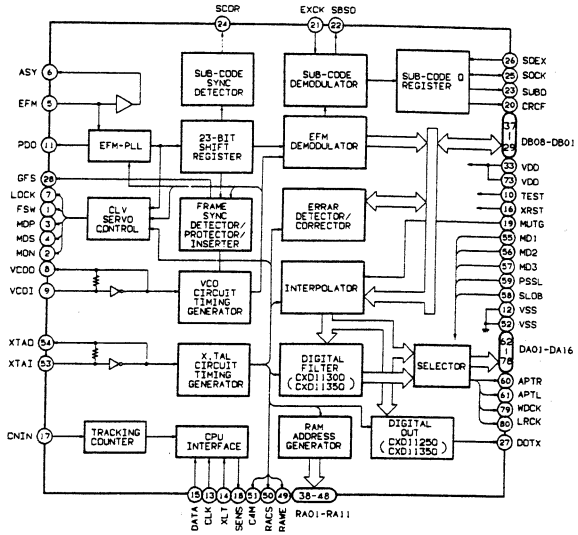

IC452 LC3517AM-15
(STATIC RAM 2K WORD X 8-BIT HIGH SPEED C-MOS)

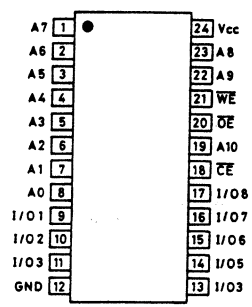

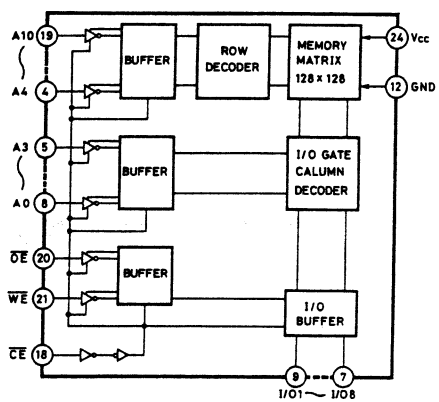

IC453 μPD82C43G (I/O EXPANDER)

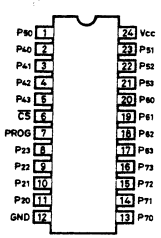

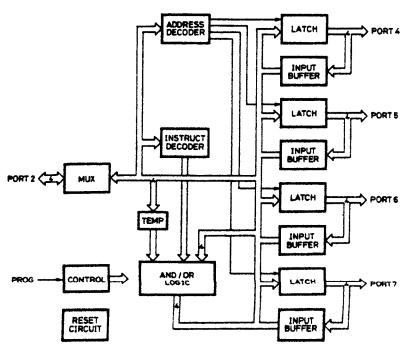

IC BLOCK DIAGRAM ③

IC502 BA6810S (LEVEL METER)

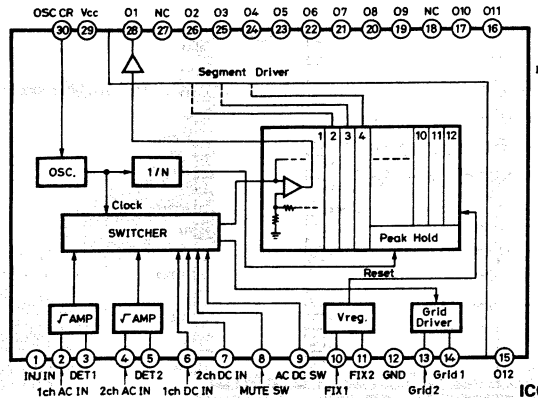

IC621 L78M05
(5V REGULATED POWER SUPPLY)

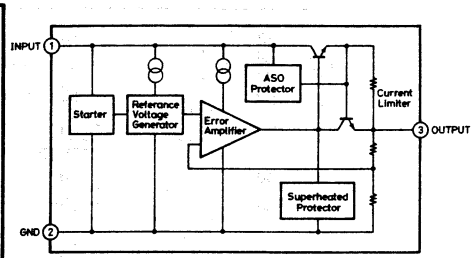

IC551 LC7880
(16-BIT D/A CONVERTER FOR CD)

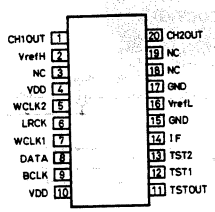

NC: NO Connection

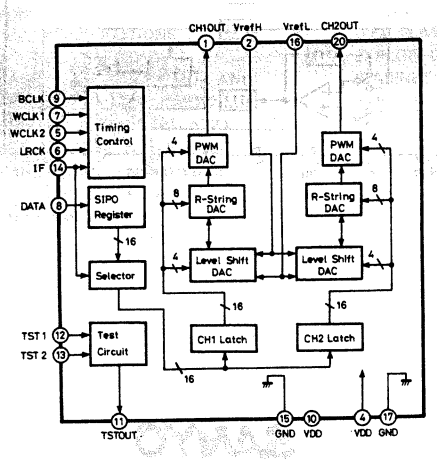

IC622 LC7800 (I/O EXPANDER)

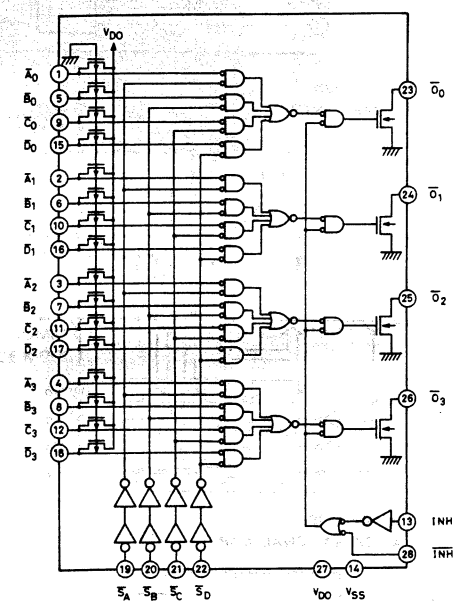

IC624, IC930 LC4011B
(QUAD 2 INPUT POSITIVE NAND GATE)

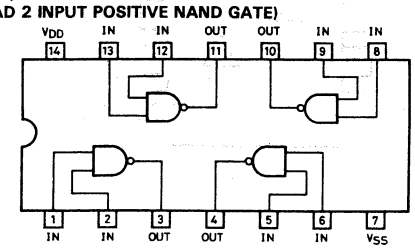

IC BLOCK DIAGRAM ④

IC623 TC9173P/F (I/O EXPANDER)

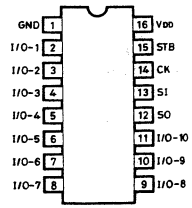

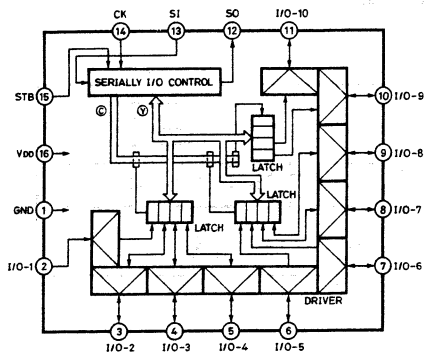

IC625 TC9174P (I/O EXPANDER)

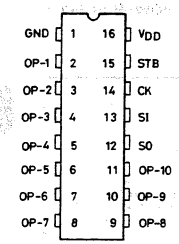

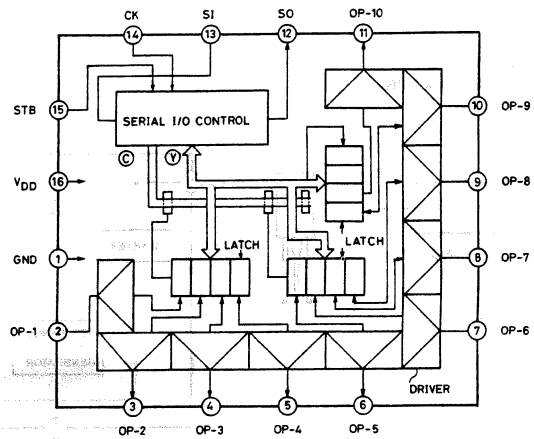

IC626, IC627 TC9312AN
(AUDIO SEQUENCE CONTROLLER)

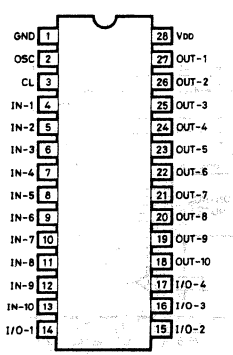

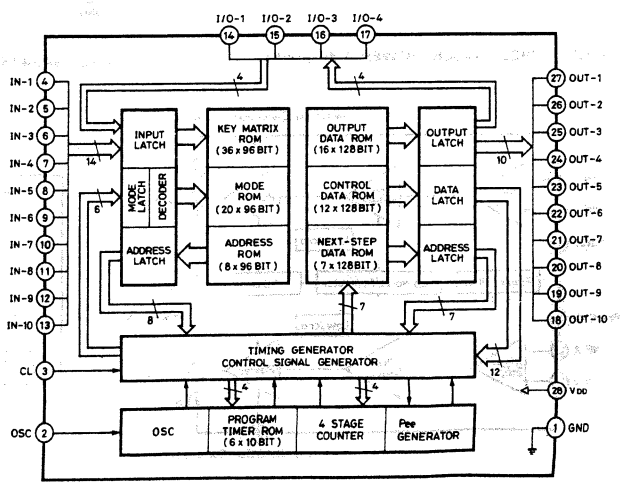

IC BLOCK DIAGRAM ⑤

IC628, IC629 LB9050
(SWITCHING TYPE HALL IC)

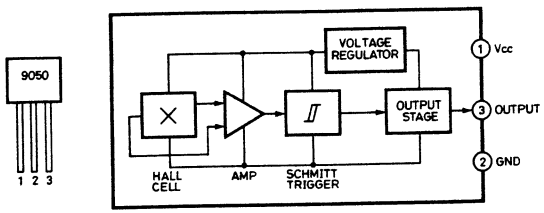

IC701, IC702 NJM4558M
(DUAL OPERATIONAL AMPLIFIER)

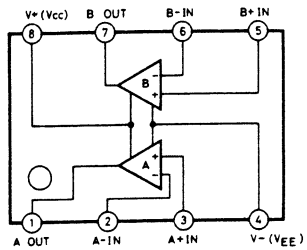

IC902 M5278L05
(VOLTAGE REGULATIOR)

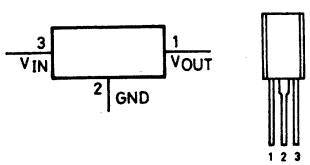

IC903 M5237L (REGULATED POWER SUPPLY)

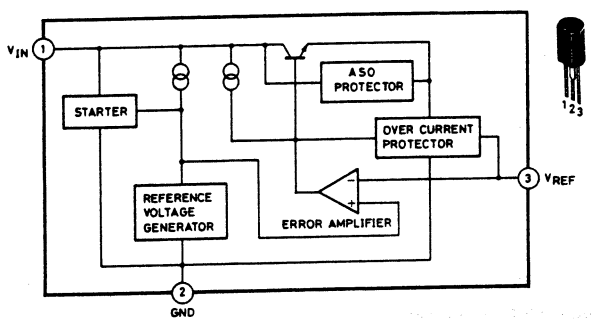

IC921, IC922 LA4508 (POWER AMPLIFIER)

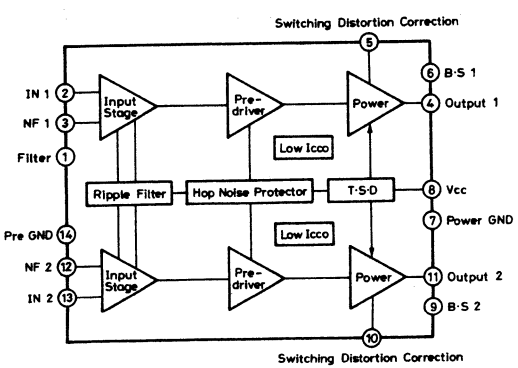

IC923 BA3416BL (LOW NOISE DUAL AMP.)

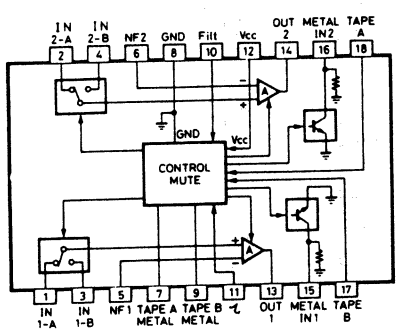

IC BLOCK DIAGRAM ⑥

IC924 LC7821 (FUNCTION SWITCH)

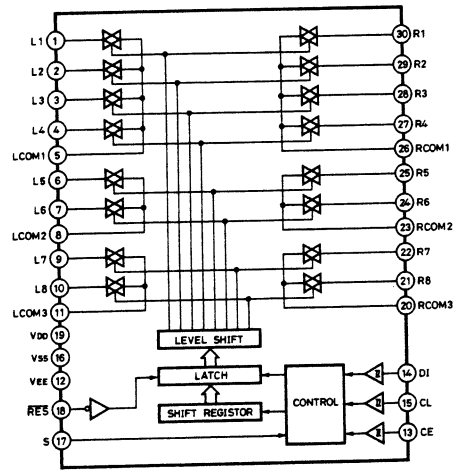

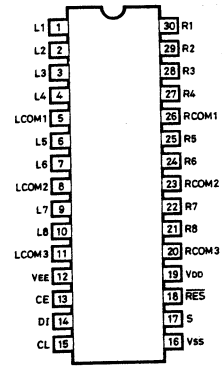

IC925 LC7535
(VOLUME CONTROL)

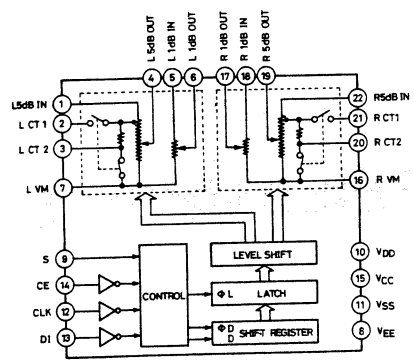

IC927 CXA1101P
(DOLBY B-TYPE NOISE REDCTION)

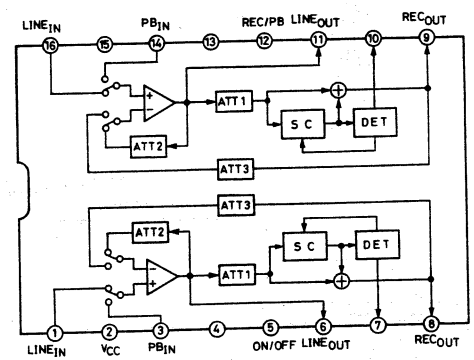

IC926 LA6458D
(DUAL OPERATIONAL AMP.)

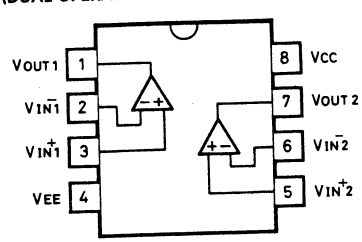

Jul./'89/2610 KM Printed in Japan.

SANYO

SANYO Electric Co., Ltd.
Osaka, Japan